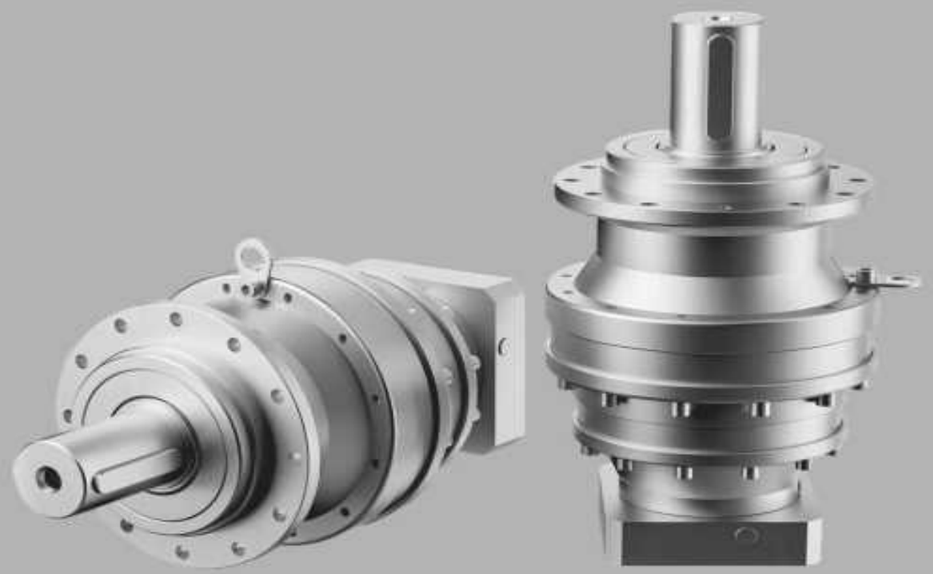

浙江侨邦精密电机有限公司
ZHEJIANG QIAOBANG PRECISION MACHINE CO.,LTD

地址：浙江省丽水市江南路785号
Address: No. 785 Jiangnan Road, Lishui City, Zhejiang Province
网址：www.chbns.com
Website: www.chbns.com

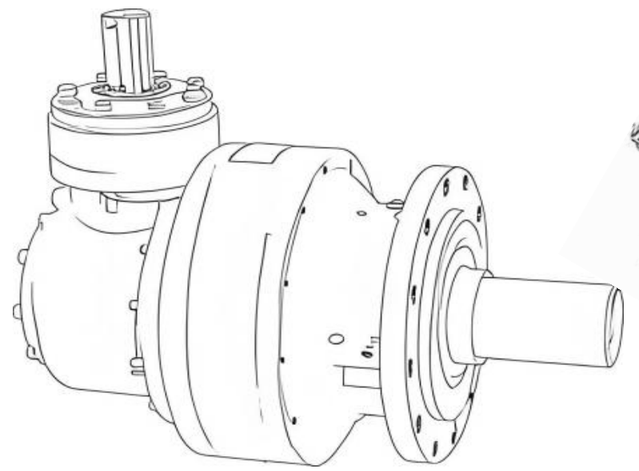

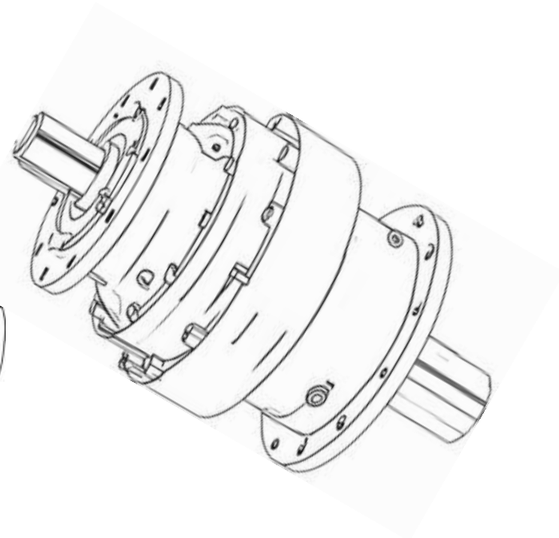

CHBNS

N series
PLANETARY GEAR UINT N系列行星减速机

We are committed to continuous improvement

Dedicated to exceeding your expectations

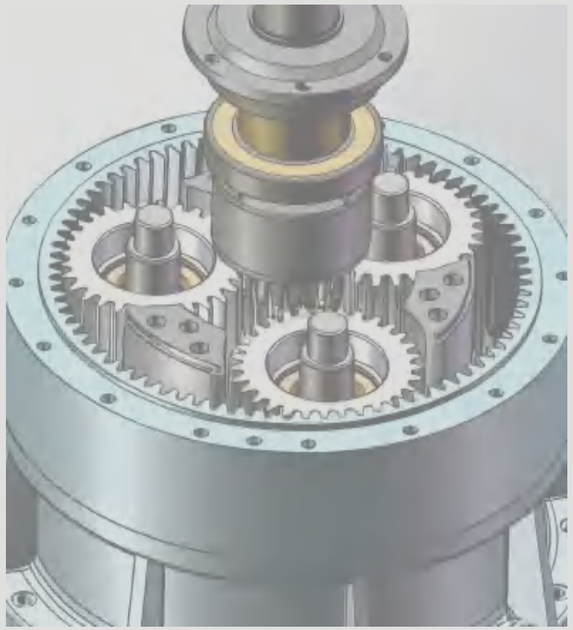









目录 CONTENTS

01	型号标示 Designation
02-03	技术定义 Technical Definition
04-05	选型举例 Selection Example
06-08	使用系数 Service Factor
09-12	安装位置 Mounting Position
13	热功率 Thermal Power
14-17	冷却系统 Cooling System
18	公称输出转矩 Normal Output Torque
19-109	技术参数 Technical Data
	安装尺寸 Mounting Dimensions
110-111	液压制动器 Hydraulic Brake
112-113	液压马达输入法兰 Adaptor for Hydraulic Motor
114	电机输入法兰(IECB5) Adaptor for Electric Motor(IECB5)
115	实心输入轴 Solid Input Shaft
116-117	径向载荷 Radial Load
118	扭力臂 Torque Arm
119	底脚安装尺寸 Dimensions for Foot Mounted
120	齿轮箱重量 Gear Unit Weight
121-122	油量 Oil Quantity

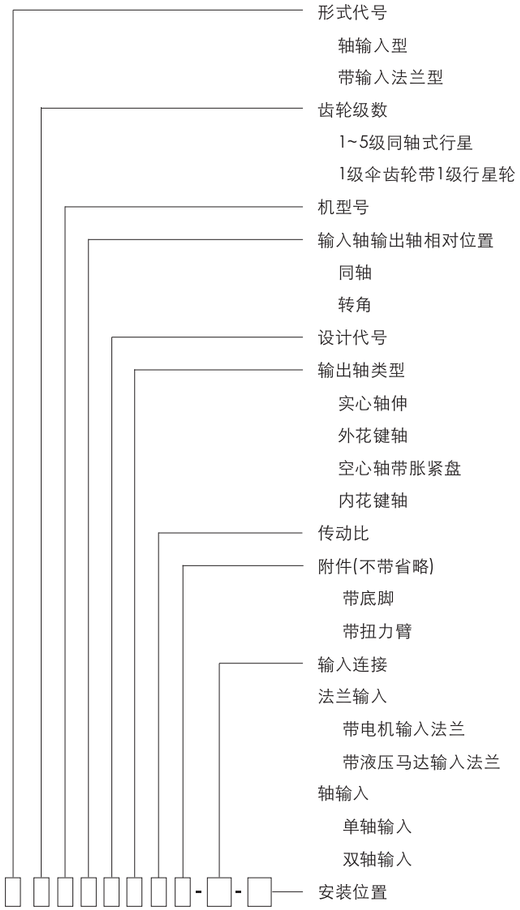

标记示例

N2E429C2C20.44FO-FS-B5

两级传动,机型429,实心输出轴,减速比20.44,带底脚,实心单轴输入,输入轴代号FS,减速器安装位置B5

N2E429 C2Z18.55-FD-V3 (INT 39Zx3mx30Px7H/GB3478)

两级传动,机型429,内花键输出轴,花键规格INT 39Zx3mx30Px7H 减速比18.55,实心双轴输入,输入轴代号FD,减速器安装位置V3

MNC3E 696R2C763.36FO1-180B5-B51

三级行星带伞齿轮传动,机型696,实心输出轴,减速比763.36,带底脚,底脚位置1,电机法兰输入,规格180B5,减速器安装位置B51

Sign Example

N2E429C2C20.44FO-FS - B5

2 stages transmission, gear unit size 429,cylinder output shaft with key, reduction ratio 20.44, with foot. cylinder input shaft, order code FS, gear unit mounting position B5

N2E429 C2Z18.55-FD-V3 (INT 39Zx3mx30Px7H/GB3478)

2 stages transmission, gear unit size 429,female splined splined hollow output shaft, perform standard: INT 39Zx3mx30Px7H/GB3478. reduction ratio 18.55, with double input shaft, order code FD, gear unit mounting position V3

MNC3E 696R2C763.36FO1-180B5-B51

3 stages planetary with bevel gear transmission, gear unit size 696, cylindrical output shaft end, reduction ratio 763.36, with foot, position 1. With electric motor flange 180B5,gear unit mounting position B51

CHBNS 传承之道 稳行致远
THE WAY OF INHERITANCE IS STEADY AND FAR-REACHING
传动装置专业制造商
PROFESSIONAL MANUFACTURER OF TRANSMISSION DEVICE
N series 系列

公称输出转矩

T_{2N}[Nm]

齿轮箱输出转矩公称值,用于预先快速选择机型号. 见18页

持续系数

[hxr/min]

持续系数为设计寿命[h] 和[r/min]转速的乘积:

输入端持续系数: fh1=hxn1

输出端持续系数:fh2=hxn2

输出端持续系数已标准化,列于相关型号技术参数中

输出转矩

T_2 [Nm]

在连续和平稳工况下,使用系数 fs=1 时,齿轮箱在输出转速[r/min] 和寿命时间[h]的乘积 ($n_2$xh) 为定值时齿轮箱所能输出的转矩;考虑了齿轮抗压和抗弯以及轴承强度限制,齿轮计算遵从GB/T 3480-1997 (eqv ISO 6336:1996)标准,轴承计算遵从ISO 281标准

最大输出转矩

T_{2max} [Nm]

齿轮箱短时启动或受间断冲击时所能承受的最大转矩,作用次数 < = 10000次,按GB/T 3480-1997(ISO 6336:1996)标准计算

输入转速

n_1 [r/min]

输入轴上许用的可以连续运转的输入转速

最高输入转速

n_{1max} [r/min]

受齿轮,轴承和油封限制,输入轴允许间断或短时间运转的最高转速.

减速比 [i]

输入转速n_1与输出转速n_2之比,即:$i=n_1/n_2$

齿轮箱的减速比已列入技术参数表中,如有特殊需要,可以按需配置

效率[η]

单级减速比传动效率为0.97,多级传动按公式计算:

η=0.97 ^n　　n------传动级数

Nominal Output Torque

T_{2N}[Nm]

It is a torque value of each gear unit size, used for a quick selection of the size of the gear unit. Please refer to the table at the beginning of the technical data. On page 18

Duration Factor

[hxr/min]

Duration factor is the product of life time [h] and rotation speed [r/min] :

for input side: $f_{h1}=hxn_1$

for output side:$f_{h2}=hxn_2$

standarized duration factor f_{h2} listed in the technical data of relative gear unit

Output Torque

T_2 [Nm]

It is the transmissible torque value in continuous and uniform operation with a service factor fs=1, and output speed [r/min] multiply life time [h] equal to a fixed value. Limited by contact & bending stress of the gear teeth, perform GB/T 3480-1997(eqv ISO 6336:1996) standard , and bearing strength, perform ISO 281 standard.

Maximum Output Torque

T_{2max} [Nm]

It is the maximum output torque in gear unit for short time start or for occasional peaks, without any permanent damage to the most stressed elements, effective times <=10000, perform GB/T 3480-1997(eqv ISO 6336:1996) standard.

Input Speed

n_1 [r/min]

The permitted speed on input shaft, allowed to continuously operating.

Maximum Input Speed

n_{1max} [r/min]

It indicates the maximum permitted input speed for short time or intermittent duty;The gear unit input speed limited by the peripheral speed of the gears, the bearings and the seals.

Reduction ratio [i]

The speed of the gear unit output shaft n_2, as a function of the input speed n_1 and of the actual reduction ratio i.

$i=n_1/n_2$

The available reduction ratios are given in the technical data table for each gear unit size. Other reduction ratios can be obtained on request.

Efficiency [η]

The efficiency of a single stage gear is 0.97 , multi-stage perform the formula

η=0.97^n　　n------transmission stage

输入和输出轴径向力

F_{r1}, F_{r2}

输入轴和输出轴许用径向力基于转速和设计寿命,并和在轴上作用点有关,为了简化和标准化,选择了三个点并按ISO 281标准计算.

见116–117页

输出转速

n_2 [r/min]

输出转速和输入转速n1 和实际减速比 i的函数式为:

$n_2=n_1/i$

输入功率

P_1 [kW]

作用于输入端的功率, 和输出转矩T_2, 输入转速n_1, 减速比i和传动效率η的函数式为:

$P_1=T_2Xn_1/i/\eta/9550$

输出功率

P_2 [kW]

作用于输出端的功率, 和输出转矩T_2, 输出转速n_2, 函数式为:

$P_2=T_2Xn_2/9550$

公称热功率

P_t [kW]

输入端公称热功率,是基于连续运转,齿轮箱内部油温低于80°C时,按一定条件计算,公称热功率见相关机型号技术参数表.

热功率系数 [ft]

由于应用工况不尽相同,需要对不同的输入转速,安装位置,环境温度和操作情况进行修正.

见13页

散热功率

P_s [kW]

如果输入功率 P_1 大于热功率修正值P_tXf_t ($P_1>P_tXf_t$), 需要冷却系统散热,冷却系统散热能力的大小用散热功率表示.

见14页

使用系数[fs]

考虑载荷类型、启动频率、运转周期和环境温度等，对输出转矩进行修正的系数.

见6–8页

Input & Output Radial Load

F_{r1}, F_{r2}

The value of permitted radial load F_{r1}, F_{r2} , base on the product (n1xh,n2xh) of speed(n_1,n_2) and life time(h), also have relation with the force effect point on the shaft, to simplification and standardization, select three point to calculate, perform ISO 281 standard.

on page 116–117

Output Speed

n_2 [r/min]

The speed of the gear unit output shaft, as a function of the input speed n1 and of the actual reduction ratio i.

$n_2=n_1/i$

Input Power

P_1 [kW]

The power applied at input of the gear unit, as a function of the output torque T_2, input speed n_1, and transmission efficiency η

$P_1=T_2Xn_1/I/\eta/9550$

Output Power

P_2 [kW]

The power applied at output of the gear unit , as a function of output torque T2 and output speed n_2

$P_2=T_2Xn_2/9550$

Nominal Thermal Power

P_t [kW]

Normal thermal power applied at input side, base on continuously working duty, internal oil temperature of the gear unit at 80 °C under the some test condition, the values listed in relative technical data.

Thermal Power Factor [ft]

Base the difference of application, such as input speed, mounting position, ambient temperature and operating duty ,the thermal power factor used for correct the normal thermal power.

On page 13

Dissipation Power

P_s [kW]

If input power P_1 greater than thermal power P_tXf_t ($P_1>P_tXf_t$),a cooling system needed. The dissipation ability of cooling system is dissipation power.

On page 14

Service Factor [fs]

It is a modificatory coefficient of the torque required at output from the gear unit and takes into account the load type, start-up frequency ,operating cycle and ambient temperature, the factors listed in the relative table.

On page 6–8

CHBNS 传承之道 稳行致远 THE WAY OF INHERITANCE IS STEADY AND FAR-REACHING
传动装置专业制造商 PROFESSIONAL MANUFACTURER OF TRANSMISSION DEVICE
N series 系列

举例

选择直线型齿轮箱,应用工况如下:

---连续运转

---电机驱动

---输入转速n_1 = 1500 r/min

---所需输出转速n_{2r} = 15 r/min

---所需输入转速T_{2r} = 50000Nm

---寿命时间5000 h

---使用系数fs = 1.3

计算

减速比计算:

$I=n_1/n_2=1500/15=100$

修正转矩计算:

$T_{2c}=T_{2r}xf_s=50000x1.3=65000$

持续系数计算:

$n_2xh=15x5000=75000$

选型

查公称输出转矩表,选T_{2n} 大于 T_{2c}的型号,

该型号为542,

见18页

在机型号542中,三级(3E)减速比中有98.24，接近于要求的减速比,

持续系数n_2xh = 100000 > 75000,

可用输出转矩T_2=67990Nm

见84页

部分数据摘录如下:

Example

Choosing a inline gear unit that works at the following conditions:

---continuously operating

---electric motor driving

---input speed n_1 = 1500 r/min

---required output speed n_{2r} = 15 r/min

---required output torque T_{2r} = 50000Nm

---the life time required 5000 h

---service factor fs = 1.3

Calculation

The reduction ratio required is worth:

$i=n_1/n_2=1500/15=100$

while the corrected torque is:

$T_{2c}=T_{2r}xf_s=50000x1.3=65000$

and the duration factor is equivalent to:

$n_2xh=15x5000=75000$

Selection

From the nominal torque table select a gear unit size which has a nominal torque value T_{2n} greater than T_{2c};

in this case the suitable size is 542

on page 18

In the technical data table of the 542 size, there is a triple stage inline gear unit (3E) with a 98.24 ratio, close to what is required; in the column relative to n_2xh = 100000 > 75000

applicable torque T_2=67990 Nm.

On page 84

Part of the data copy as following:

542	i	T_2 [N.m]							n_1	n_{1max}	T_{2max}	P_t
		n_2xh [r/minxh]										
		10000	25000	50000	100000	500000	1000000	2000000	[r/min]	[r/min]	[N.m]	[kW]
1E	3.86	93380	80810	72400	67520	60810	58110	55520	500	750	180320	70
	4.33	93410	80930	72580	67990	61300	58630	56060	500	750	184070	70
	5	80960	70190	62970	60040	54180	51840	49590	500	750	163700	70
	6	61460	53310	48680	46580	42070	40250	38510	500	750	128390	70
2E	14.01	93380	80810	72400	67520	60810	58110	55520	1200	1500	180320	56
	15.44	93380	80810	72400	67520	60810	58110	55520	1200	1500	180320	56
	17.37	93380	80810	72400	67520	60810	58110	55520	1200	1500	180320	56
	20.07	93380	80810	72400	67520	60810	58110	55520	1200	1500	180320	56
	27.06	93410	80930	72580	67990	61300	58630	56060	1200	1500	184070	56
	31.25	80960	70190	62970	60040	54180	51840	49590	1200	1500	163700	56
	37.50	61460	53310	48680	46580	42070	40250	38510	1200	1500	128390	56
3E	44.56	93380	80810	72400	67520	60810	58110	55520	1500	2000	180320	38
	51.00	93380	80810	72400	67520	60810	58110	55520	1500	2000	180320	38
	61.09	93380	80810	72400	67520	60810	58110	55520	1500	2000	180320	38
	68.52	93380	80810	72400	67520	60810	58110	55520	1500	2000	180320	38
	79.45	93380	80810	72400	67520	60810	58110	55520	1500	2000	180320	38
	98.24	93410	80930	72580	67990	61300	58630	56060	1500	2000	184070	38
	121.78	93410	80930	72580	67990	61300	58630	56060	1500	2000	184070	38
	141.63	93410	80930	72580	67990	61300	58630	56060	1500	2000	184070	38

选型

该值(T_2=67990)大于 所需值(T_{2C}=65000)，齿轮箱满足使用要求

校核输入转速

许用输入转速n_1=1500r/min,符合使用要求 见84页

校核热功率

计算输入功率:

$P_1=T_{2C}Xn_1/I/\eta/9550$ =65000X1500/98.24/(0.97^3)/9550=114kW,

标准电机功率应为132kW,4极

查3E542型号齿轮箱,热功率:

Pt=38kW 见84页

P1>Pt, 需要冷却系统

散热功率计算:

$Ps=0.1x(P_1-PtXksxkp/kt)=0.1x(114-38x0.89x1/1.45)=9.06(kW)$

选择冷却系统CR3 见14页

校核最大输出转矩

功率132kW,4极标准电机,查相关手册可得数据:

额定转矩:T_{1N}=850N.m,

最大转矩: T_{1max}=850x2.2=1870N.m,

作用在齿轮箱上最大转矩:

$T_{2cmax}=T_{1max}xixη$=1870x98.24x0.97^3≈167666N.m

查3E542型号齿轮箱,最大输出转矩:T_{2max}=184070 见84页

$T_{2max}>T_{2cmax}$

结论

选择正确

Selection

Since this value(T_2=67990) is greater than torque T_{2c}(T_{2C}=65000),the gear unit selected is suitable for working at the conditions required.

Check Input Speed

Input speed, permitted continuously speed n_1=1500r/min,fitting working condition on page 84

Check Thermal Power

Input power required is worth:

$P_1=T_{2c}Xn_1/I/\eta/9550$ =65000X1500/98.24/(0.97^3)/9550=114(kW),

Standard electric motor should be 132kW,4 poles

for size 3E542,thermal power

Pt=38kW on page 84

P1>Pt, so a cooling system required

Dissipation power required is worth:

$Ps=0.1x(P_1-PtXksxkp/kt)=0.1x(114-38x0.89x1/1.45)=9.06(kW)$

select cooling system CR3, on page 14

Check Maximum Output Torque

For 132kW,4 poles electric motor, data got from relative handbook:

Normal torque:T_{1N}=850N.m,

Maximum torque: T_{1max}=850x2.2=1870N.m,

Maximum torque effect on gear unit output end:

$T_{2cmax}=T_{1max}xixη$=1870x98.24x0.97^3≈167666N.m

Gear unit 3E542 maximum output toque: T_{2max}=184070 on page 84

$T_{2max}>T_{2cmax}$

Conclusion

Selection is correct

CHBNS 传承之道 稳行致远
THE WAY OF INHERITANCE IS STEADY AND FAR-REACHING
传动装置专业制造商
PROFESSIONAL MANUFACTURER OF TRANSMISSION DEVICE
N series 系列

工业应用中的载荷分类

所列载荷是按经验分类的。
不在本列表范围的载荷类型可以联系我们共同探讨。
根据实际应用情况选用载荷分类，并和设计要求相符合。
根据实际的运行工况，载荷类型分类可能和所列分类不同，请酌情修改
符号说明:
U=稳定载荷
M=中等冲击
H=严重冲击
* =仅限于24小时运转

气压机, 压缩机	运输机械
M 旋转活塞式压缩机	M 螺旋输送机
U 轴流式气压机	M 钢带输送机
M 冷却塔	M 链板式输送机
M 风扇人工产气	M 牵引式输送机
U 涡轮压缩机	起重机械
建筑机械	M 吊杆起重机构
M 混凝土搅拌器	H 提升机构*
M 提升机	M 摆动机构*
M 道路施工机械	M 回转机构
化工机械	H 行走机构
U 液体搅拌器	采矿机械
M 半流体搅拌器	H 斗式输送机
M 重载离心分离机	H 铲斗装置
U 轻载离心分离机	H 破碎装置
M 冷却滚筒*	M 绞盘装置
M 干燥滚筒*	M 泵
M 混合器	M 回转机构
空气压缩机	H 掘进机构
H 活塞式空气压缩机	M 轨道运动机构
M 涡轮空气压缩机	食品机械
运输机械	U 灌装机及包装机
M 链斗式输送机	M 甘蔗破碎机*
M 斗式提升机	M 甘蔗切割机*
M 斗轮带式输送机	M 甘蔗压榨机*
M 散装橡胶带式输送机	H 捏合机
H 块装橡胶带式输送机	M 捣碎机
U 桶装粉末输送机	U 打包机
M 链条式输送机	M 甜菜切割机
M 循环轨道输送机	M 甜菜清洗机
M 轻载提升机	变换器及发生器
H 重载提升机*	H 频率变换器
H 倾斜式输送机*	H 发生器
M 链带输送机	H 焊接机
M 乘客运输机	

Load Classification Symbols in Applications & Industries

The listed load classification symbols are empirical values.
Prerequisite for application is that the machinery and equipment mentioned correspond to generally accepted design and load specifications.
In case of deviations from listed conditions, please refer to us.
Listed load classification symbols may be modified after giving exact details of operating conditions.
U = Uniform load
M = Medium shock load
H = Heavy shock load

Blowers, compressor	Conveyors
M Rotary piston blowers	M Screw conveyors
U Blowers (axial/radial)	M Steel belt conveyors
M Cooling tower	M Trough chain conveyors
M Induced draught fans	M Hauling winches
U Turbo blowers	Cranes
Building machinery	M Derricking jib gears
M Concrete mixers	H Hoisting gears *
M Hoists	M Luffing gears *
M Road construction machinery	M Slewing gears
Chemical industry	H Travelling gears
U Agitators (liquid material)	Dredgers
M Agitators (semi-liquid material)	H Bucket conveyors
M Centrifuges (heavy)	H Bucket wheels
U Centrifuges (light)	H Cutter heads
M Cooling drums *	M Manoeuvring winches
M Drying drums *	M Pumps
M Mixers	M Slewing gears
Compressors	H Travelling gears (caterpillar)
H Piston compressors	M Travelling gears (rails)
M Turbo compressors	Food industry machinery
Conveyors	U Bottling and container filling machines
M Apron conveyors	M Cane crushers *
M Ballast elevators	M Cane knives *
M Band pocket conveyors	M Cane mills *
M Belt conveyors (bulk material)	H Kneading machines
H Belt conveyors (piece goods)	M Mash tubs, crystallizers
U Bucket conveyors for flour	U Packaging machines
M Chain conveyors	M Sugar beet cutters
M Circular conveyors	M Sugar beet washing machines
M Goods lifts	Generators, transformers
H Hoists *	H Frequency transformers
H Inclined hoists *	H Generators
M Link conveyors	H Welding generators
M Passenger lifts	

工业应用中的载荷分类

服装机械
M 滚筒式机械
M 洗衣机
轧钢机械
H 带钢轧机 *
M 链条输送机 *
H 冷轧机 *
H 连铸机*
M 冷床装置 *
H 剪切机*
M 卷取机 *
H 精整机 *
H 中重型电镀机械 *
H 初轧机*
H 钢锭装卸运送机械 *
H 推钢机械 *
H 主传动装置
H 剪板机 *
M 厚板机组*
M 轧辊调整装置
M 辊式矫直机 *
H 重型翻板机 *
M 轻型翻板机 *
H 薄板机组 *
M 修整机组 *
H 焊接钢管机组
M 线带卷取机组
M 拉丝架
金属加工机械
U 弯曲和校直机械
H 锻压机械
H 锻锤 *
U 工作母机中的辅助机械
M 工作母机的主传动
H 平面加工机械
H 矫直板机械
H 压力机
H 冲床

纸品加工机械
H 光泽缸 *
H 纸浆碾磨机 *
H 纸浆碾磨机 *
H 真空(吸水)筛浆机 *
H 真空(吸水)压榨机 *
H 打浆机 *
H 挤浆机*
塑料机械
M 研光机 *
M 破碎机械 *
M 挤压机 *
M 混合机 *
泵
U 轻质液体离心泵
M 粘性液体离心泵
H 活塞泵
H 柱塞泵 *
H 压力泵 *
橡胶机械
M 研光机 *
H 挤压机 *
M 混合机 *
H 搅拌机 *
H 碾滚成型机械 *
矿石及泥土加工机械
H 球磨机 *
H 搅拌机 *
H 碎石机
H 压砖机
H 锤式粉碎机 *
H 圆盘切割机 *
H 开槽机 *
纺织机械
M 混纺机
M 织布机
M 印染机
M 鞣革机

Load Classification Symbols in Applications & Industries

Laundries
M Tumblers
M Washing machines
Metal rolling mills
H Billet shears *
M Chain transfers *
H Cold rolling mills *
H Continuous casting plants *
M Cooling beds *
H Cropping shears *
M Cross transfers *
H Descaling machines *
H Heavy and medium plate mills *
H Ingot and blooming mills *
H Ingot handling machinery *
H Ingot pushers *
H Manipulators
H Plate shears *
M Plate tilters *
M Roller adjustment drives
M Roller straighteners *
H Roller tables (heavy) *
M Roller tables (light) *
H Sheet mills *
M Trimming shears *
H Tube welding machines
M Winding machines (strip and wire)
M Wire drawing benches
Metal working machines
U Countershafts, line shafts
H Forging presses
H Hammers *
U Machine tools, auxiliary drives
M Machine tools, main drives
H Metal planing machines
H Plate straightening machines
H Presses
H Punch presses
M Shears
M Sheet metal bending machines

Paper machines
H Glazing cylinders *
H Pulpers *
H Pulp grinders *
H Suction rolls *
H Suction presses *
H Wet presses *
H Willows *
Plastic industry machinery
M Calenders *
M Crushers *
M Extruders *
M Mixers *
Pumps
U Centrifugal pumps (light liquids)
M Centrifugal pumps (viscous liquids)
H Piston pumps
H Plunger pumps *
H Pressure pumps *
Rubber machinery
M Calenders *
H Extruders *
M Mixers *
H Pug mills *
H Rolling mills *
Stone and clay working machines
H Ball mills *
H Beater mills *
H Breakers
H Brick presses
H Hammer mills *
H Rotary kilns *
H Tube mills *
Textile machines
M Batchers
M Looms
M Printing and dyeing machines
M Tanning vats
M Willows
Water treatment

CHBNS 传承之道 稳行致远 THE WAY OF INHERITANCE IS STEADY AND FAR-REACHING
传动装置专业制造商 PROFESSIONAL MANUFACTURER OF TRANSMISSION DEVICE
N series 系列

使用系数的计算

选型号时，使用系数应符合下面公式:

$f_s > f_1 x f_2 x f_3 x f_4$

f_s 减速机使用系数,见相关机型技术参数

f_1 每天工作时间系数

f_2 启动频率，峰值载荷作用频率及制动频率系数

f_3 每小时负荷率 (ED)

f_4 环境温度系数

The Calculation of Service Factor

Please perform following formula:

$f_s > f_1 x f_2 x f_3 x f_4$

f_s Service factor of Gear unit,please refer to relative data sheet

f_1 for daily operating periods and load classifications

f_2 for starts, peak torques, braking

f_3 for operating cycle per hour (ED)

f_4 for ambient temperature

f_1 每天工作时间系数	f_1 for daily operating periods and load classifications			
运行周期 hrs Daily operating period (hrs)	≤0.5	<0.5~2	<2~10	<10~24
载荷分类 U Load classification symbol U	0.8	0.9	1	1.2
载荷分类 M Load classification symbol M	0.9	1	1.2	1.4
载荷分类 H Load classification symbol H	1	1.2	1.4	1.6

f_2 启动频率，峰值载荷作用频率及制动频率系数	f_2 for starts, peak torques, braking			
每小时作用次数	≤10	<10~60	<60~240	<240~600
f_2	1	1.1	1.2	1.3

f_3 每小时负荷率 (ED)	f_3 for operating duty (ED)				
ED %	100	80	60	40	20
f_4	1	0.94	0.86	0.74	0.56

f_4 环境温度系数	f_4 for ambient temperature				
环境温度 ambient temperature(°C)	-10~10	10~20	20~30	30~40	40~50
n_1<300r/min	0.89	1	1.14	1.33	1.6
> 300 - 1500r/min	0.9	1	1.17	1.42	1.75
> 1500r/min	0.9	1	1.2	1.5	1.9

同轴减速器

○ — 通气帽
◒ — 油镜
● — 放油塞

In-line Gear Unit

○ — Breather
◒ — OilLevel
● — OilDrain

C1...B5

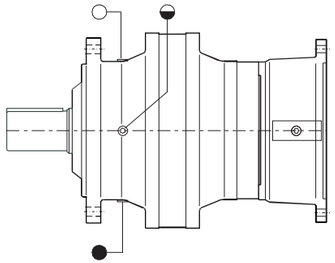

C2C(S)...B5

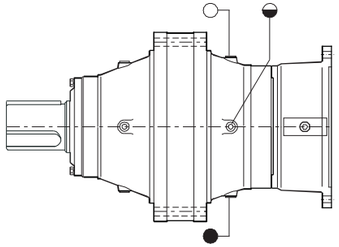

C2Z(H)...B5

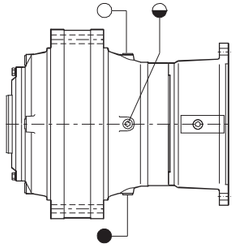

C1...V1

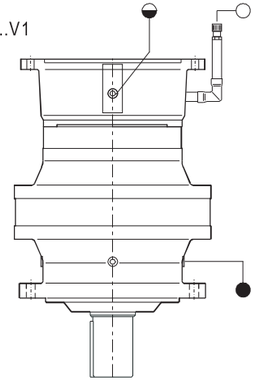

C2C(S)...V1

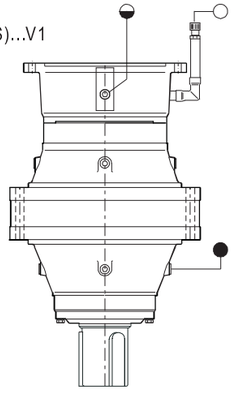

C2Z(H)...V1

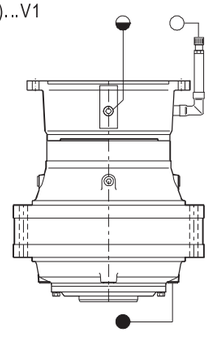

C1...V3

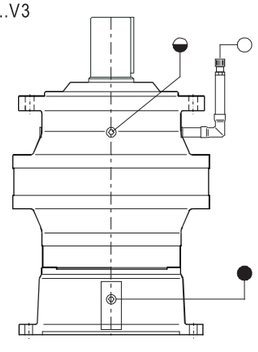

C2C(S)...V3

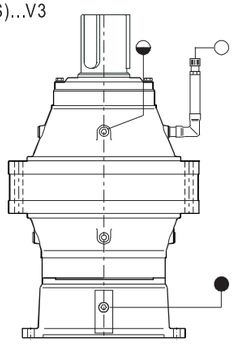

C2Z(H)...V3

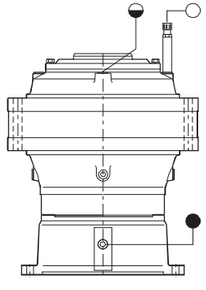

转角减速器

○ — 通气帽
◒ — 油镜
● — 放油塞

Right Angle Gear Unit

○ — Breather
◒ — Oil Level
● — OilDrain

C1...B51

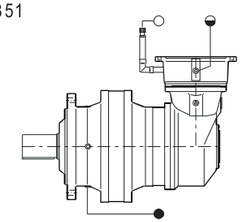

C2C(S)...B51

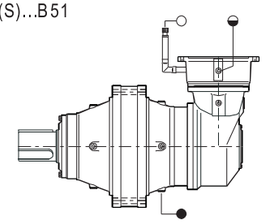

C2Z(H)...B51

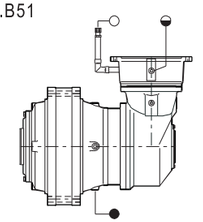

C1...B5/B53

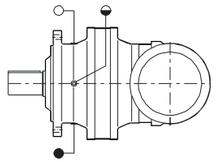

C2C(S)...B5/B53

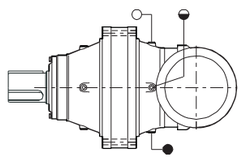

C2Z(H)...B5/B53

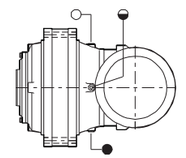

C1...B52

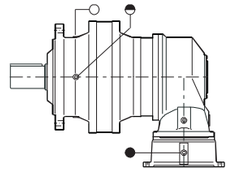

C2C(S)...B52

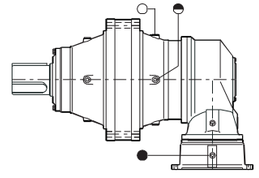

C2Z(H)...B52

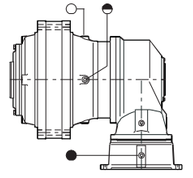

C1...V1

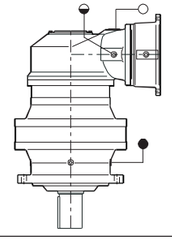

C2C(S)...V1

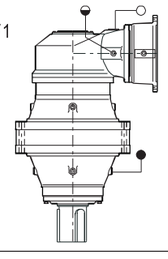

C2Z(H)...V1

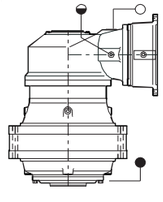

C1...V3

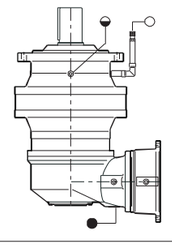

C2C(S)...V3

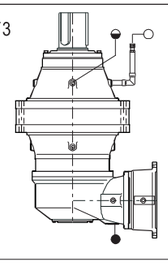

C2Z(H)...V3

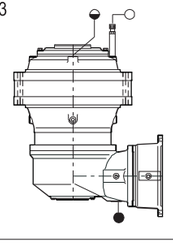

油箱

同轴式齿轮箱安装位置为V1和V3时,转角齿轮箱安装位置为B51,V1和V3时,齿轮箱应加满油,这样使顶端轴承和油封得到充分润滑.

齿轮箱在加满油的状态下运转,随着油温的升高,体积会膨胀,这样需要油箱去容纳膨胀的油以避免齿轮箱内部压力升高而引起齿轮箱泄露.

膨胀油箱通过快换接头和软管与齿轮箱快速连接,这样也使加油和更换油更加方便容易.

Oil Tank

when the in-line gear unit mounted as V1and V3 position, the right angle gear unit mounted in B51,V1and V3 position, it is necessary to fill oil full up to the top of the gear unit so that the bearings and seals can get enough lubricant.

As the gear unit is working in the completely filled conditions, when the lubricant increases in volume with the temperatur avising, it is necessary to have a tank that allows the oil to expand to reduce the risk of high pressures being created inside the gear unit and cause the gear unit leaking.

The expansion tanks can be connected to the gear unit with a rapid connection of flexible pipes, the tank makes oil filling and exchange more convenient.

V1

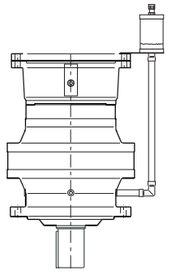

V3

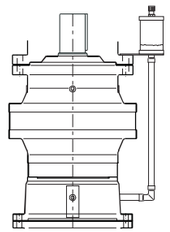

B51

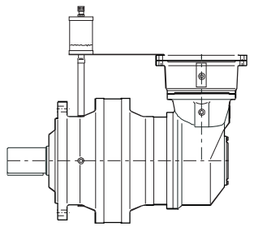

V3

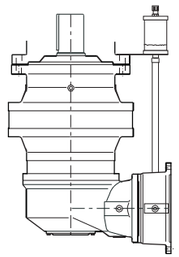

V1

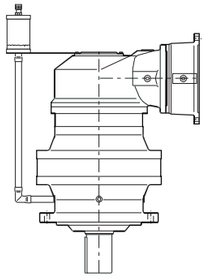

特殊工况

对于安装位置B5,如果输出转速(n2)低于1r/min,应加油到齿轮箱顶部,避免齿轮无润滑运转

The Special Working Condition

If the output speed is less than 1r/min for B5 horizontal mounting, it is necessary to fill oil at the top oil level as shown in below drawing

B5

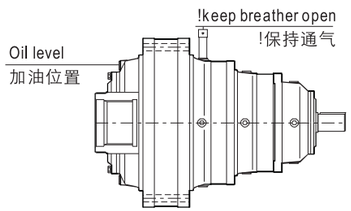

CHBNS 传承之道 稳行致远
THE WAY OF INHERITANCE IS STEADY AND FAR-REACHING
传动装置专业制造商
PROFESSIONAL MANUFACTURER OF TRANSMISSION DEVICE
N series 系列

润滑油类型

润滑油的选择按本表推荐选取,国内使用,本公司出厂时均加VG150矿物齿轮油,从运输安全考虑,出口货物不加注润滑油.

Oil Type

The gear unit is filled with VG150 mineral oil for domestic customers, considering transport safety, the gear unit supplied without oil for export.

输出转速/output speed [r/min]	工作油温/operating temperature [50°C]	工作油温/operating temperature [70°C]
>20	VG150	VG220
>5	VG220	VG320
<5	VG320	VG460

润滑油类型 oil type		矿物油 Mineral oil			石蜡基合成油 Synthetic oil(PAO)			聚乙二醇基合成油 Synthetic oil(PG)		
环境温度 Ambient temperature		-10°C/+30°C	+10°C/+45°C	+30°C/+60°C	-20°C/+60°C			-20°C/+60°C		
粘度等级 viscidity		ISO VG 150	ISO VG 220	ISO VG 320	ISO VG 150	ISO VG 220	ISO VG 320	ISO VG 150	ISO VG 220	ISO VG 320
品牌 Brand	AGIP	Blasia 150	Blasia 220	Blasia 320	-	Blasia SX 220	Blasia SX 320	Blasia S 150	Blasia S 220	Blasia S 320
	BP	Energol GR-XP150	Energol GR-XP220	Energol GR-XP320	Enersyn EPX150	Enersyn EPX220	Enersyn EPX320	Enersyn Sg150	Enersyn SG-XP220	Enersyn SG-XP320
	CASTROL	Alpha SP 150	Alpha SP 220	Alpha SP 320	Alphasyn Ep150	Alphasyn Ep220	Alphasyn Ep320	Alphasyn Pg150	Alphasyn Pg220	Alphasyn Pg320
	CHEVRON	Ultra Gear 150	Ultra Gear 220	Ultra Gear 320	Tegra Synthetic Gear 150	Tegra Synthetic Gear 220	Tegra Synthetic Gear 320	HiPerSYN 150	HiPerSYN 220	HiPerSYN 320
	ESSO	Spartan Ep150	Spartan Ep220	Spartan EP 320	Spartan S Ep150	Spartan S Ep220	Spartan S Ep320	Glycolube 150	Glycolube 220	Glycolube 320
	MOBIL	Mobilgear XMP150	Mobilgear XMP220	Mobilgear XMP320	Mobilgear SHC XMP 150	Mobilgear SHC XMP 220	Mobilgear SHC XMP 320	GlygoyleHe 320	Glygoyle 22	Glygoyle 30
	MOLIKOTE	L-0115	L-0122	L-0132	L-1115	L-1122	L-1132	-	-	-
	SHELL	Omala 150	Omala 220	Omala 320	Omala HD 150	Omala HD 220	Omala HD 320	Tivela S 150	Tivela S 220	Tivela S 320
	TEXACO	Meropa 150	Meropa 220	Meropa 320	Pinnacle Ep150	Pinnacle Ep220	Pinnacle Ep320	-	Synlube CLP220	Synlube CLP320
	TOTAL	Carter Ep150	Carter Ep220	Carter EP 320	Carter Sh150	Carter Sh220	Carter Sh320	Carter Sy150	Carter Sy220	Carter Sy320
	TRIBOL	1100/150	1100/220	1100/320	1510/150	1510/220	1510/320	800\150	800\220	800\320

热功率 P_t[kW]

输入端热功率，是基于连续运转，齿轮箱内部油温低于80°C时，按以下条件计算所得值：

-输入转速: 1000 r/min;
- 溅油润滑;
- 齿轮箱水平安装，无循环空气影响;
- 润滑油在油油标中间位置;
- 润滑油粘度ISO VG 150 ;
- 环境温度 20°C.

热功率值已列入相关型号技术参数中，不同工况下，热功率按以下公式修正:

$P_1 \leqslant P_t x f_t$　　P_1------输入功率

$F_t = k_s x k_p / k_t$　　ft------热功率系数

Thermal Power P_t[kW]

Thermal power applied at input side, base on continuously working duty, internal oil temperature of the gear unit lower than 80°C under the following conditions:

- input speed: 1000 r/min;
- oil splash lubrication;
- gear unit in horizontal position, no subject to air recirculation;
- quantity of oil corresponding to the half full mark;
- ISO VG 150 mineral oil;
- ambient temperature 20° C.

The value of the thermal power of each gear unit is given in the relative technical data table. For conditions differing from those described above, the thermal power value has to be corrected as following formula:

$P_1 \leqslant P_t x f_t$　　P_1------input power

$f_t = k_s x k_p / k_t$　　ft------thermal power factor

热功率系数

Thermal Power Factor

k_s 速度系数	k_s for input speed										
n_1(r/min)	500	750	1000	1250	1500	1750	2000	2250	2500	2750	3000
k_s	1.08	1.04	1.00	0.95	0.89	0.82	0.75	0.66	0.59	0.54	0.48

k_p 安装位置系数	k_p for mounting position		
安装位置/mounting position	B5,B53	V1,B51	V3,B52
k_p	1	0.85	0.71

k_t 环境温度系数			k_t for ambient temperature				
工作制 operating duty	每小时工作时间 operating time per hour	每小时负荷率 operating cycle per hour	环境温度/ambient temperature(°C)				
	minutes	ED%	-10~10	10~20	20~30	30~40	40~50
连续运转 continuous duty	60	100	0.9	1	1.15	1.45	1.82
断续运转 Intermittent duty	48	80	0.8	0.9	1	1.25	1.56
	36	60	0.7	0.75	0.9	1.1	1.34
	24	40	0.6	0.65	0.8	0.95	1.13
	12	20	0.5	0.6	0.7	0.85	1.03

CHBNS 传承之道 稳行致远
THE WAY OF INHERITANCE IS STEADY AND FAR-REACHING
传动装置专业制造商
PROFESSIONAL MANUFACTURER OF TRANSMISSION DEVICE
N series 系列

散热功率

如果输入功率 P_1 大于热功率P_t (P_1>P_t), 需要冷却系统散热,系统散热功率 Ps 按下面公式计算:

$P_s = 0.1x(P_1 - P_t x f_t)$

$= 0.1x(P_1 - P_t x k_s x k_p / k_t)$

Ps------散热功率

t_a------ 环境温度

ft------热功率系数

Dissipation Power P_s[kW]

If input power P_1 greater than thermal power P (P_1> P_t),a cooling system is required. dissipation power Ps perform following formula:

$P_s = 0.1x(P_1 - P_t x f_t)$

$= 0.1x(P_1 - P_t x k_s x k_p / k_t)$

Ps------dissipation power

t_a------ ambient temperature

ft------thermal power factor

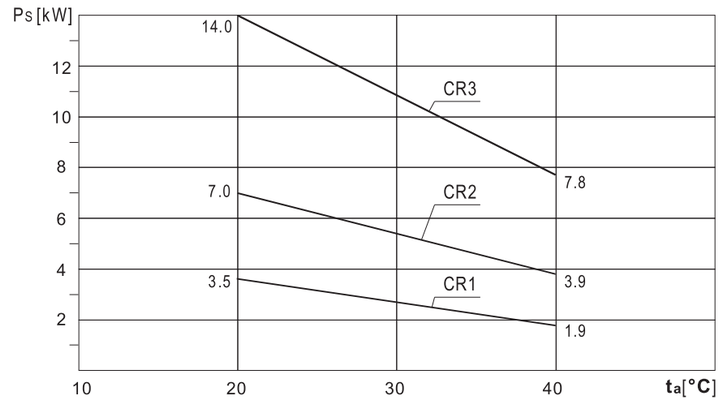

安装尺寸

Mounting dimensions

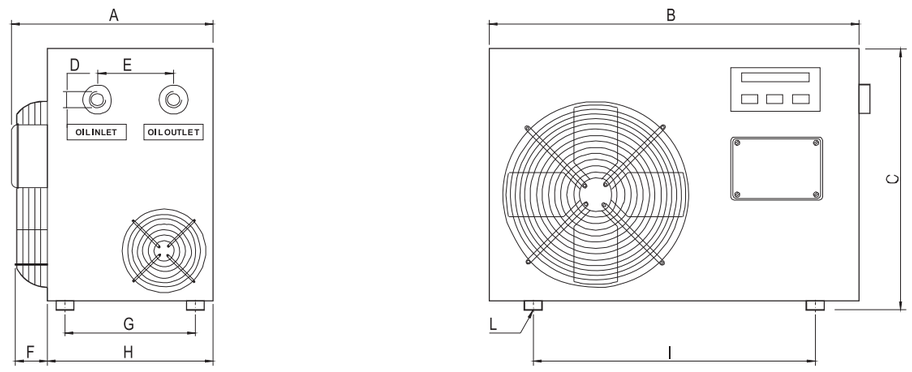

	A	B	C	D	E	F	G	H	I	L
CR1	310	490	410	G1/2	80	10	190	245	415	M10
CR2	365	600	463	G3/4	100	45	250	300	530	M10
CR3	465	760	575	IN=G1 OUT=G3/4	100	45	350	400	690	M10

原理图和技术参数　　Principles & Technical Data

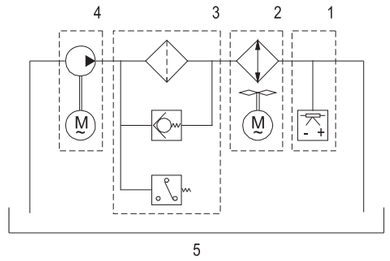

序号 Item	名称 Name	功能 Function	技术参数/Technical data		
			CR1	CR2	CR3
1	温控仪 thermo-couple	油温监控并报警 test oil temperature & supply warning signal	AC220V/50Hz,±100°C	AC220V/50Hz,±100°C	AC220V/50Hz,±100°C
2	冷却风扇 cooling fan	冷却润滑油 cool oil	AC220V/50Hz,600m^3 /h	AC220V/50Hz,1000m^3 /h	AC220V/50Hz,3000m^3 /h
3	过滤器 filter	过滤杂质并报警 filter impurity	AC220V/50Hz,80μ	AC220V/50Hz,80μ	AC220V/50Hz,80μ
4	油泵 pump	供油动力 pump lubrication oil	AC380V/0.37KW,9L/min,5bar	AC380V/0.75KW,25L/min,5bar	AC380V/1.5KW,40L/min,5bar
5	减速器 gear unit	按客户设计 base requirements	按客户参数选取	按客户参数选取	按客户参数选取
重量/weight [kg]			28	40	63

冷却系统安装，一拖一　Installation for cooling system, one to one

B5 水平安装
for B5 horizontal mounting position

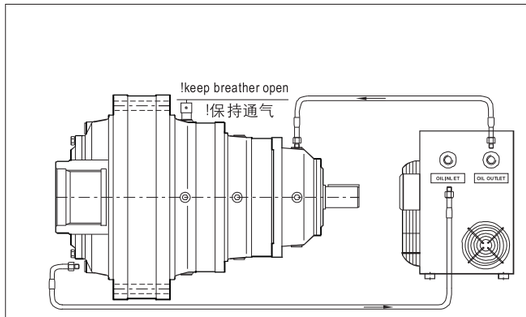

V1 立式安装，输出轴朝下
for V1 vertical mounting position, output shaft downwards

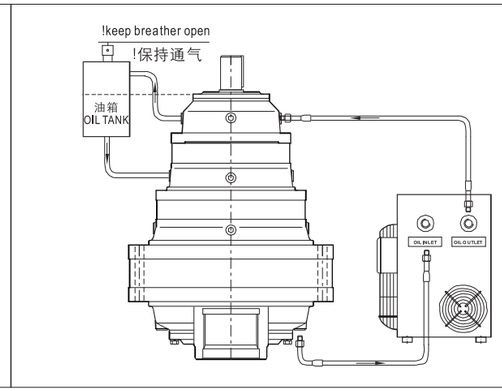

冷却系统安装，一拖一
Installation for cooling system, one to one

V3 立式安装，输出轴朝上
for V3 vertical mounting position, output shaft upwards

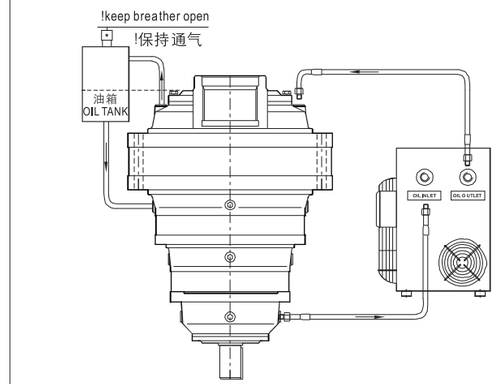

冷却系统安装，一拖二
Installation for cooling system, one to two

B5 水平安装,上下布局润滑
for B5 horizontal mounting position, two-piece lubricated

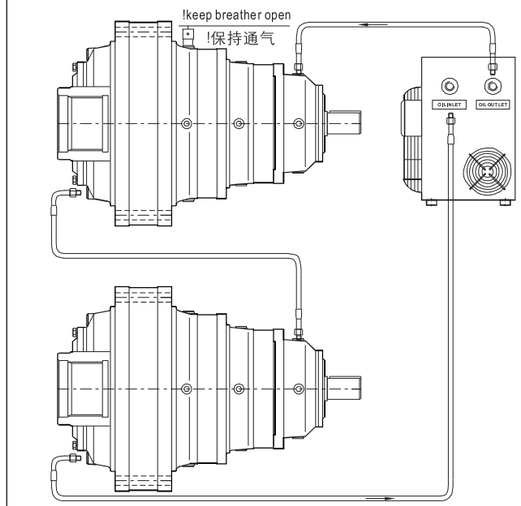

冷却系统安装，一拖二
Installation for cooling system, one to two

B5 水平安装,同水平面布局润滑
for B5 horizontal mounting position, same level lubricated

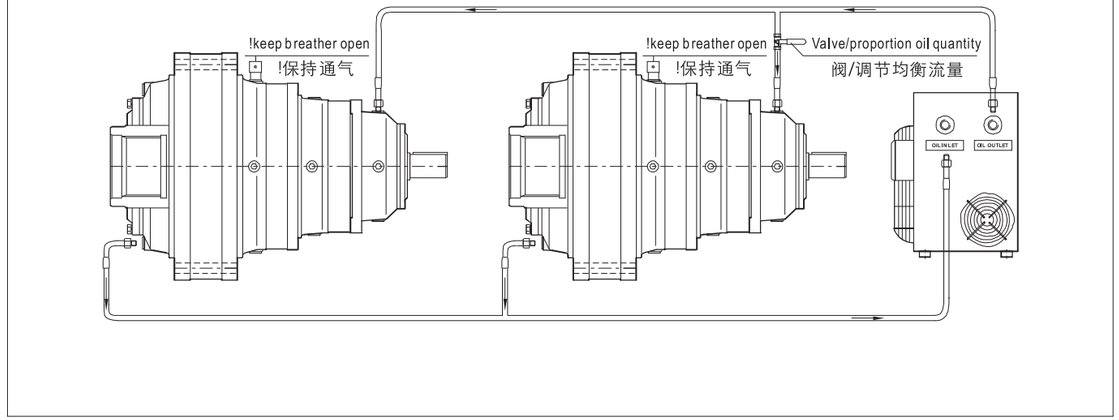

冷却系统安装，一拖二

V1 立式安装，输出轴朝下

Installation for cooling system, one to two

for V1 vertical mounting position, output shaft downwards

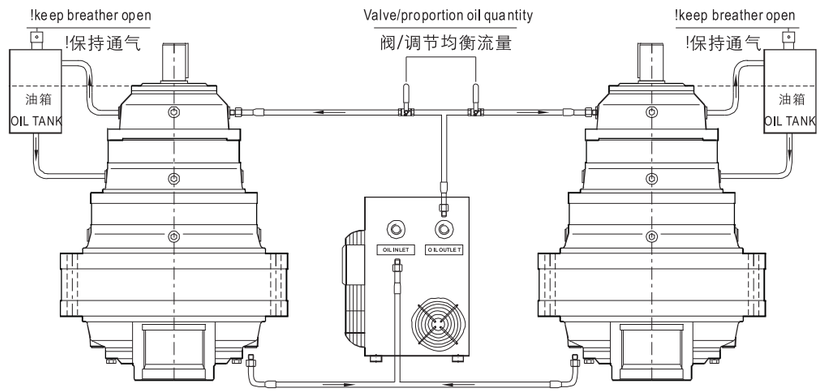

V3 立式安装，输出轴朝上

for V3 vertical mounting position, output shaft upwards

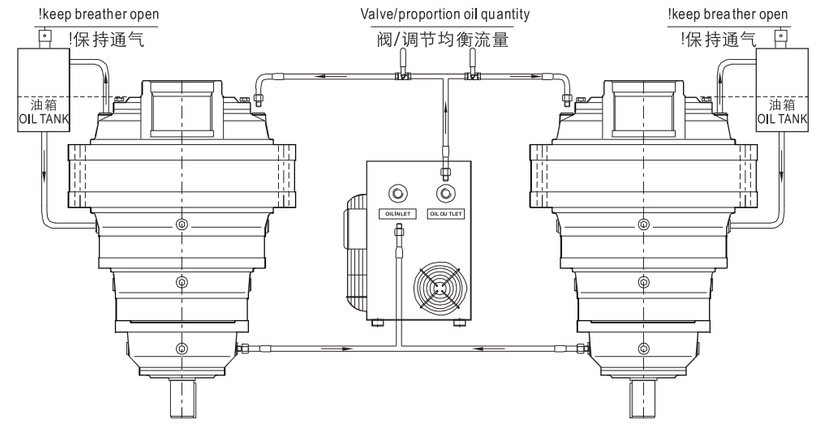

CHBNS 传承之道 稳行致远
THE WAY OF INHERITANCE IS STEADY AND FAR-REACHING
传动装置专业制造商
PROFESSIONAL MANUFACTURER OF TRANSMISSION DEVICE
N series 系列

公称输出转矩

公称输出转矩仅用于预先快速选择机型号，详细技术参数见相关型号.

Nominal Output Torque

Nominal output torque only used for a quick selection of gear unit size ,the detail technical data listed in relative tables.

机型号 Gear unit size	公称输出转矩 Nominal output torque T_{2N}[Nm]	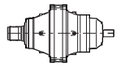 页数 page	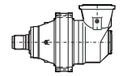 页数 page
200	1500	19	21
201	2000	20	23
240	3500	24	28
241	4000	26	31
280	4300	32	36
281	7300	34	39
353 354	13000	40	44
355	16000	48	52
400	20000	53	57
401	23000	58	62
428	26000	63	66
429	30000	67	71
445	32000	72	76
446	43000	74	78
510	63000	79	83
542	75000	84	87
543	100000	86	89
695	150000	90	94
696	200000	95	99
810	300000	100	104
885	420000	105	109

200	i	T_2 [N.m] n2xh [r/minxh] 10000	25000	50000	100000	500000	1000000	2000000	n_1 [r/min]	n_{1max} [r/min]	T_{2max} [N.m]	P_t [kW]
1E	3.26	1830	1570	1410	1280	1160	1110	1060	1500	2000	3270	13
	3.47	1980	1730	1560	1400	1270	1220	1170	1500	2200	3600	13
	4.04	1960	1700	1520	1380	1240	1190	1130	2000	2500	3640	13
	4.43	1890	1640	1470	1320	1190	1140	1090	2000	2500	3490	13
	4.95	1540	1340	1200	1110	1000	960	910	2000	2500	2980	13
	5.67	1320	1150	1010	920	780	730	680	2000	2500	2640	13
	6.25	1260	1090	980	930	840	800	770	2000	2500	2560	13
	7	990	820	700	660	550	520	500	2000	2500	2040	13
	8	930	800	730	710	630	610	580	2000	2500	1960	13
	11.5	540	470	440	430	380	370	350	2000	2500	1190	13
2E	13.2	1830	1570	1410	1280	1160	1110	1060	2000	2500	3270	7.8
	14.4	1980	1730	1560	1400	1270	1220	1170	2000	2500	3600	7.8
	17.2	1980	1730	1560	1400	1270	1220	1170	2000	2500	3600	7.8
	21.7	1980	1730	1560	1400	1270	1220	1170	2000	2500	3600	7.8
	25.3	1960	1700	1520	1380	1240	1190	1130	2000	2500	3640	7.8
	31.0	1890	1640	1470	1320	1190	1140	1090	2000	2500	3490	7.8
	35.4	1890	1640	1470	1320	1190	1140	1090	2000	2500	3490	7.8
	39.6	1540	1340	1200	1110	1000	960	910	2000	2500	2980	7.8
	50.9	1890	1640	1470	1320	1190	1140	1090	2000	2500	3490	7.8
3E	42.9	1830	1570	1410	1280	1160	1110	1060	2000	2500	3270	6
	50.1	1830	1570	1410	1280	1160	1110	1060	2000	2500	3270	6
	58.3	1830	1570	1410	1280	1160	1110	1060	2000	2500	3270	6
	69.4	1980	1730	1560	1400	1270	1220	1170	2000	2500	3600	6
	87.6	1980	1730	1560	1400	1270	1220	1170	2000	2500	3600	6
	98.1	1980	1730	1560	1400	1270	1220	1170	2000	2500	3600	6
	123.0	1980	1730	1560	1400	1270	1220	1170	2000	2500	3600	6
	151.5	1830	1570	1410	1280	1160	1110	1060	2000	2500	3270	6
	176.8	1980	1730	1560	1400	1270	1220	1170	2000	2500	3600	6
	212.6	1830	1570	1410	1280	1160	1110	1060	2000	2500	3270	6
	249.4	1980	1730	1560	1400	1270	1220	1170	2000	2500	3600	6
	288.9	1890	1640	1470	1320	1190	1140	1090	2000	2500	3490	6
	355.8	1540	1340	1200	1110	1000	960	910	2000	2500	2980	6
	398.5	1540	1340	1200	1110	1000	960	910	2000	2500	2980	6
CE	9.37	1980	1730	1560	1400	1270	1220	1170	1500	2000	3600	7.8
	12.15	1980	1730	1560	1400	1270	1220	1170	1500	2000	3600	7.8
	14.14	1960	1700	1520	1380	1240	1190	1130	1500	2000	3640	7.8
	17.33	1540	1340	1200	1110	1000	960	910	1500	2000	2980	7.8
	19.85	1320	1150	1010	920	780	730	680	1500	2000	2640	7.8
	26.09	1890	1640	1470	1320	1190	1140	1090	1500	2000	3490	7.8
	29.16	1540	1340	1200	1110	1000	960	910	1500	2000	2980	7.8
	33.40	1320	1150	1010	920	780	730	680	1500	2000	2640	7.8
C2E	35.56	1830	1570	1410	1280	1160	1110	1060	1500	2000	3270	6.5
	41.50	1980	1730	1560	1400	1270	1220	1170	1500	2000	3600	6.5
	49.07	1980	1730	1560	1400	1270	1220	1170	1500	2000	3600	6.5
	60.12	1980	1730	1560	1400	1270	1220	1170	1500	2000	3600	6.5
	70.92	1980	1730	1560	1400	1270	1220	1170	1500	2000	3600	6.5
	82.57	1980	1730	1560	1400	1270	1220	1170	1500	2000	3600	6.5
	101.17	1980	1730	1560	1400	1270	1220	1170	1500	2000	3600	6.5
	127.74	1980	1730	1560	1400	1270	1220	1170	1500	2000	3600	6.5
	148.72	1960	1700	1520	1380	1240	1190	1130	1500	2000	3640	6.5
	190.36	1960	1700	1520	1380	1240	1190	1130	1500	2000	3640	6.5
	208.74	1890	1640	1470	1320	1190	1140	1090	1500	2000	3490	6.5
	233.24	1540	1340	1200	1110	1000	960	910	1500	2000	2980	6.5

CHBNS 传承之道 稳行致远
THE WAY OF INHERITANCE IS STEADY AND FAR-REACHING
传动装置专业制造商
PROFESSIONAL MANUFACTURER OF TRANSMISSION DEVICE
N series 系列

201	i	T_2 [N.m] n2xh [r/minxh] 10000	25000	50000	100000	500000	1000000	2000000	n_1 [r/min]	n_{1max} [r/min]	T_{2max} [N.m]	P_t [kW]
1E	3.14	2430	2090	1870	1760	1590	1500	1440	1200	1500	4530	13
	3.72	2410	2060	1860	1700	1530	1460	1360	1500	2000	4620	13
	4.16	2030	1760	1570	1470	1290	1210	1130	1500	2000	4020	13
	5.85	1750	1500	1370	1310	1180	1120	1080	1500	2000	3650	13
2E	12.69	2430	2090	1870	1760	1590	1500	1440	2000	2500	4530	7.8
	15.03	2410	2060	1860	1700	1530	1460	1360	2000	2500	4620	7.8
	18.41	2410	2060	1860	1700	1530	1460	1360	2000	2500	4620	7.8
	21.09	2410	2060	1860	1700	1530	1460	1360	2000	2500	4620	7.8
	26.00	2030	1760	1570	1470	1290	1210	1130	2000	2500	4020	7.8
	29.12	2030	1760	1570	1470	1290	1210	1130	2000	2500	4020	7.8
	33.28	2030	1760	1570	1470	1290	1210	1130	2000	2500	4020	7.8
	46.80	1750	1500	1370	1310	1180	1120	1080	2000	2500	4290	7.8
3E	41.36	2430	2090	1870	1760	1590	1500	1440	2000	2500	4530	6
	48.99	2410	2060	1860	1700	1530	1460	1360	2000	2500	4620	6
	60.03	2410	2060	1860	1700	1530	1460	1360	2000	2500	4620	6
	68.76	2410	2060	1860	1700	1530	1460	1360	2000	2500	4620	6
	84.76	2030	1760	1570	1470	1290	1210	1130	2000	2500	4020	6
	101.05	2030	1760	1570	1470	1290	1210	1130	2000	2500	4020	6
	128.70	2030	1760	1570	1470	1290	1210	1130	2000	2500	4020	6
	147.42	2030	1760	1570	1470	1290	1210	1130	2000	2500	4020	6
	188.70	2030	1760	1570	1470	1290	1210	1130	2000	2500	4020	6
	208.00	2030	1760	1570	1470	1290	1210	1130	2000	2500	4020	6
	242.56	2410	2060	1860	1700	1530	1460	1360	2000	2500	4620	6
	299.00	2030	1760	1570	1470	1290	1210	1130	2000	2500	4020	6
	333.01	1750	1500	1370	1310	1180	1120	1080	2000	2500	3650	6
	420.47	1750	1500	1370	1310	1180	1120	1080	2000	2500	3650	6
CE	10.04	2410	2060	1860	1700	1530	1460	1360	1500	2000	4620	7.8
	13.02	2410	2060	1860	1700	1530	1460	1360	1500	2000	4620	7.8
	14.56	2030	1760	1570	1470	1290	1210	1130	1500	2000	4020	7.8
	20.48	1750	1500	1370	1310	1180	1120	1080	1500	2000	3650	7.8
	24.50	2030	1760	1570	1470	1290	1210	1130	1500	2000	4020	7.8
	34.46	1750	1500	1370	1310	1180	1120	1080	1500	2000	3650	7.8
C2E	38.14	2430	2090	1870	1760	1590	1500	1440	1500	2000	4530	6.5
	44.40	2430	2090	1870	1760	1590	1500	1440	1500	2000	4530	6.5
	48.69	2430	2090	1870	1760	1590	1500	1440	1500	2000	4530	6.5
	62.31	2430	2090	1870	1760	1590	1500	1440	1500	2000	4530	6.5
	68.69	2430	2090	1870	1760	1590	1500	1440	1500	2000	4530	6.5
	81.38	2410	2060	1860	1700	1530	1460	1360	1500	2000	4620	6.5
	104.16	2410	2060	1860	1700	1530	1460	1360	1500	2000	4620	6.5
	124.23	2410	2060	1860	1700	1530	1460	1360	1500	2000	4620	6.5
	153.38	2410	2060	1860	1700	1530	1460	1360	1500	2000	4620	6.5
	175.29	2410	2060	1860	1700	1530	1460	1360	1500	2000	4620	6.5
	196.02	2030	1760	1570	1470	1290	1210	1130	1500	2000	4020	6.5
	275.65	1750	1500	1370	1310	1180	1120	1080	1500	2000	3650	6.5

200C1Z
201C1Z

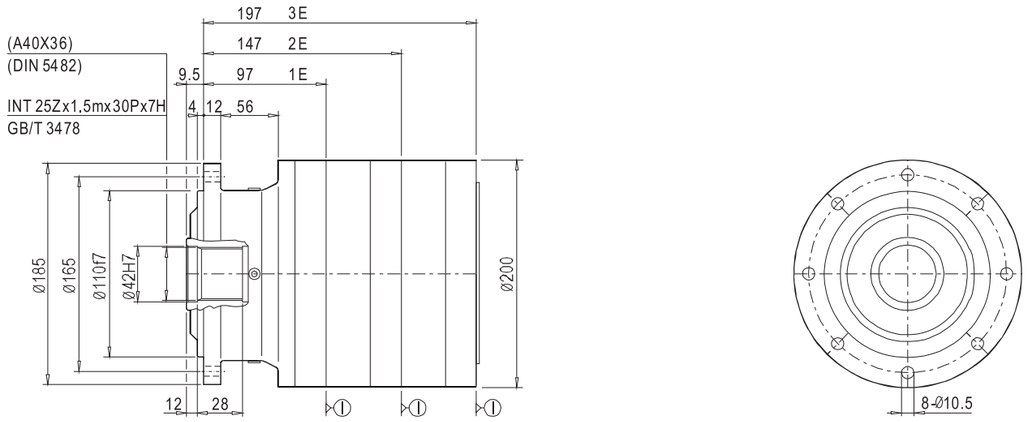

200C1H
201C1H

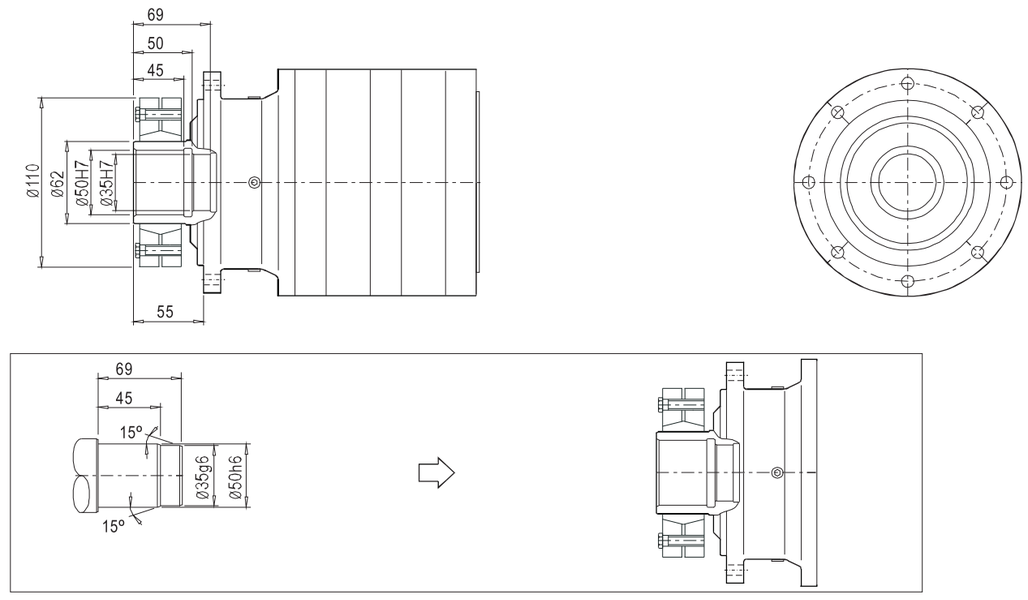

200C1C
201C1C

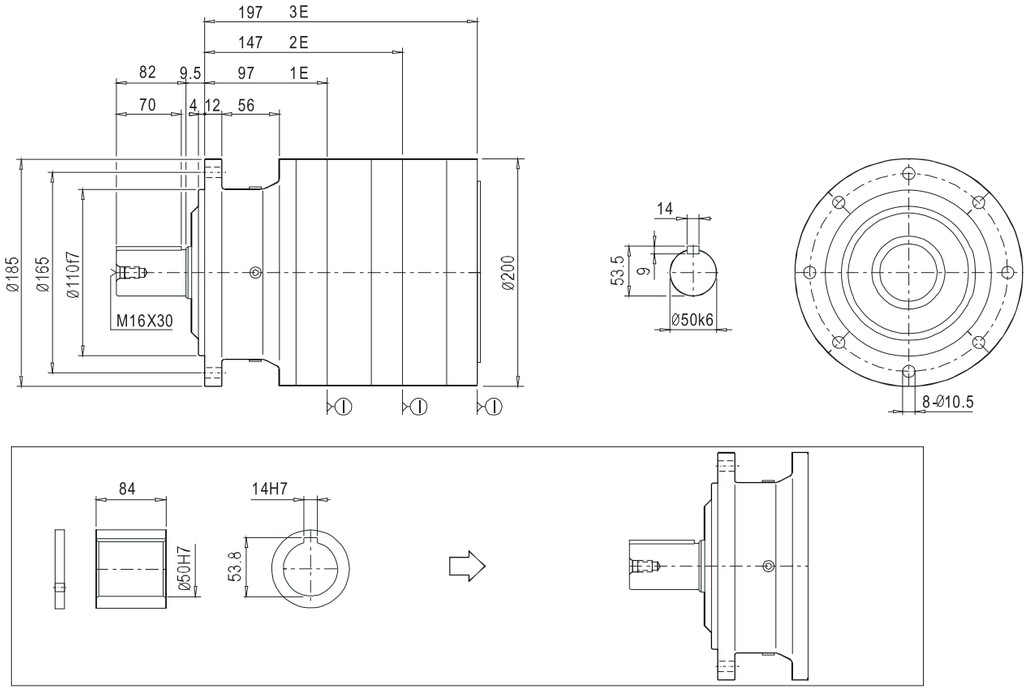

200C1S
201C1S

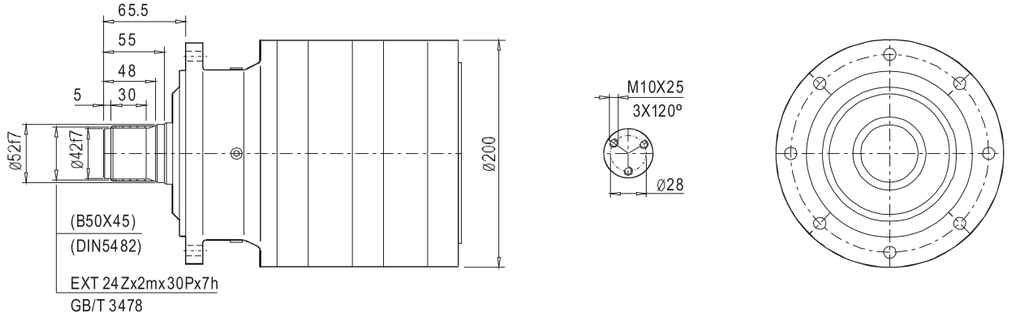

200R1C(S)
201R1C(S)

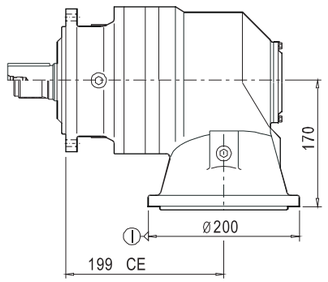

200R1Z(H)
201R1Z(H)

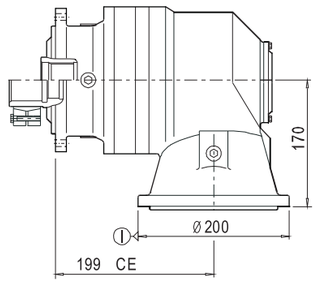

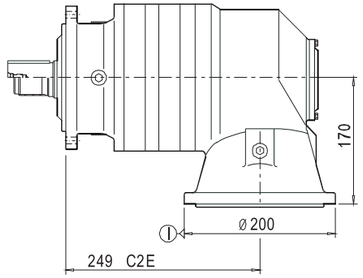

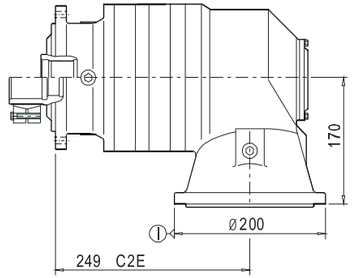

CHBNS 传承之道 稳行致远
THE WAY OF INHERITANCE IS STEADY AND FAR-REACHING
传动装置专业制造商
PROFESSIONAL MANUFACTURER OF TRANSMISSION DEVICE
N series 系列

240	i	T2 [N.m] n2xh [r/minxh] 10000	25000	50000	100000	500000	1000000	2000000	n1 [r/min]	n1max [r/min]	T2max [N.m]	Pt [kW]
1E	3.33	4160	3590	3220	2940	2640	2520	2410	1200	1500	7490	22
	3.55	4420	3820	3410	3100	2800	2660	2550	1200	1800	8450	22
	4.11	4230	3670	3290	2980	2680	2560	2440	1500	2000	7940	22
	4.5	4110	3550	3180	2920	2630	2510	2400	1500	2000	7800	22
	5	3300	2850	2560	2370	2140	2050	1960	1500	2000	6400	22
	5.67	2430	2100	1870	1770	1580	1480	1390	1500	2000	4830	22
	6.25	2310	2000	1800	1710	1550	1470	1410	1500	2000	4690	22
	7	1810	1570	1420	1340	1140	1060	1000	1500	2000	3750	22
	8	1670	1480	1350	1290	1160	1120	1070	1500	2000	3590	22
	9.4	1310	1140	1070	1010	920	880	820	1500	2000	2840	22
2E	13.45	4160	3590	3220	2940	2640	2520	2410	2000	2500	7490	11
	15.73	4420	3820	3410	3100	2800	2660	2550	2000	2500	8450	11
	17.57	4420	3820	3410	3100	2800	2660	2550	2000	2500	8450	11
	20.34	4230	3670	3290	2980	2680	2560	2440	2000	2500	7940	11
	25.52	4110	3550	3180	2920	2630	2510	2400	2000	2500	7800	11
	31.25	3300	2850	2560	2370	2140	2050	1960	2000	2500	6400	11
	35.00	3300	2850	2560	2370	2140	2050	1960	2000	2500	6400	11
	40.00	3300	2850	2560	2370	2140	2050	1960	2000	2500	6400	11
	50.00	2310	2000	1800	1710	1550	1470	1410	2000	2500	4690	11
3E	43.86	4160	3590	3220	2940	2640	2520	2410	2000	2500	7490	8.4
	48.09	4160	3590	3220	2940	2640	2520	2410	2000	2500	7490	8.4
	61.55	4160	3590	3220	2940	2640	2520	2410	2000	2500	7490	8.4
	72.33	4420	3820	3410	3100	2800	2660	2550	2000	2500	8450	8.4
	86.23	4420	3820	3410	3100	2800	2660	2550	2000	2500	8450	8.4
	98.55	4420	3820	3410	3100	2800	2660	2550	2000	2500	8450	8.4
	125.81	4420	3820	3410	3100	2800	2660	2550	2000	2500	8450	8.4
	151.05	4160	3590	3220	2940	2640	2520	2410	2000	2500	7490	8.4
	186.43	4230	3670	3290	2980	2680	2560	2440	2000	2500	7940	8.4
	204.12	4230	3670	3290	2980	2680	2560	2440	2000	2500	7940	8.4
	250.00	3300	2850	2560	2370	2140	2050	1960	2000	2500	6400	8.4
	293.42	4230	3670	3290	2980	2680	2560	2440	2000	2500	7940	8.4
	359.38	3300	2850	2560	2370	2140	2050	1960	2000	2500	6400	8.4
	407.53	2430	2100	1870	1770	1580	1480	1390	2000	2500	4830	8.4
4E	292.22	4420	3820	3410	3100	2800	2660	2550	2000	2500	8450	7
	358.88	4420	3820	3410	3100	2800	2660	2550	2000	2500	8450	7
	436.57	4420	3820	3410	3100	2800	2660	2550	2000	2500	8450	7
	487.81	4420	3820	3410	3100	2800	2660	2550	2000	2500	8450	7
	610.24	4160	3590	3220	2940	2640	2520	2410	2000	2500	7490	7
	713.35	4420	3820	3410	3100	2800	2660	2550	2000	2500	8450	7
	878.63	4420	3820	3410	3100	2800	2660	2550	2000	2500	8450	7
	1030.83	4420	3820	3410	3100	2800	2660	2550	2000	2500	8450	7
	1263.02	4420	3820	3410	3100	2800	2660	2550	2000	2500	8450	7
	1462.26	4230	3670	3290	2980	2680	2560	2440	2000	2500	7940	7
	1875.95	4230	3670	3290	2980	2680	2560	2440	2000	2500	7940	7
	2143.94	4230	3670	3290	2980	2680	2560	2440	2000	2500	7940	7
	2587.50	4110	3550	3180	2920	2630	2510	2400	2000	2500	7800	7

240	i	T2 [N.m] n2xh [r/minxh] 10000	25000	50000	100000	500000	1000000	2000000	n1 [r/min]	n1max [r/min]	T2max [N.m]	Pt [kW]
CE	15.31	2430	2100	1870	1770	1580	1480	1390	1500	2000	4830	11
	19.85	2430	2100	1870	1770	1580	1480	1390	1500	2000	4830	11
	21.88	2310	2000	1800	1710	1550	1470	1410	1500	2000	4690	11
	24.50	1810	1570	1420	1340	1140	1060	1000	1500	2000	3750	11
	28.00	1670	1480	1350	1290	1160	1120	1070	1500	2000	3590	11
	36.81	2310	2000	1800	1710	1550	1470	1410	1500	2000	4690	11
C2E	33.26	4420	3820	3410	3100	2800	2660	2550	1500	2000	8450	8.3
	42.46	4420	3820	3410	3100	2800	2660	2550	1500	2000	8450	8.3
	50.20	4420	3820	3410	3100	2800	2660	2550	1500	2000	8450	8.3
	61.50	4420	3820	3410	3100	2800	2660	2550	1500	2000	8450	8.3
	70.45	4420	3820	3410	3100	2800	2660	2550	1500	2000	8450	8.3
	81.56	4230	3670	3290	2980	2680	2560	2440	1500	2000	7940	8.3
	103.50	4420	3820	3410	3100	2800	2660	2550	1500	2000	8450	8.3
	119.83	4230	3670	3290	2980	2680	2560	2440	1500	2000	7940	8.3
	150.28	4110	3550	3180	2920	2630	2510	2400	1500	2000	7800	8.3
	184.06	3300	2850	2560	2370	2140	2050	1960	1500	2000	6400	8.3
	206.15	3300	2850	2560	2370	2140	2050	1960	1500	2000	6400	8.3
	235.60	3300	2850	2560	2370	2140	2050	1960	1500	2000	6400	8.3
	294.50	2310	2000	1800	1710	1550	1470	1410	1500	2000	4690	8.3
C3E	258.32	4160	3590	3220	2940	2640	2520	2410	1500	2000	7490	7.2
	283.26	4160	3590	3220	2940	2640	2520	2410	1500	2000	7490	7.2
	362.54	4160	3590	3220	2940	2640	2520	2410	1500	2000	7490	7.2
	426.03	4420	3820	3410	3100	2800	2660	2550	1500	2000	8450	7.2
	507.89	4420	3820	3410	3100	2800	2660	2550	1500	2000	8450	7.2
	580.45	4420	3820	3410	3100	2800	2660	2550	1500	2000	8450	7.2
	741.03	4420	3820	3410	3100	2800	2660	2550	1500	2000	8450	7.2
	889.68	4160	3590	3220	2940	2640	2520	2410	1500	2000	7490	7.2
	1098.07	4230	3670	3290	2980	2680	2560	2440	1500	2000	7940	7.2
	1202.27	4230	3670	3290	2980	2680	2560	2440	1500	2000	7940	7.2
	1472.50	3300	2850	2560	2370	2140	2050	1960	1500	2000	6400	7.2

CHBNS 传承之道 稳行致远
THE WAY OF INHERITANCE IS STEADY AND FAR-REACHING
传动装置专业制造商
PROFESSIONAL MANUFACTURER OF TRANSMISSION DEVICE
N series 系列

241	i	T2 [N.m] n2xh [r/minxh] 10000	25000	50000	100000	500000	1000000	2000000	n1 [r/min]	n1max [r/min]	T2max [N.m]	Pt [kW]
1E	3.33	5060	4350	3990	3830	3440	3240	3160	1200	1500	9600	22
	4	5420	4690	4190	3910	3520	3370	3210	1500	2000	10570	22
	4.5	5240	4540	4070	3810	3440	3280	3140	1500	2000	10270	22
	5.2	4440	3830	3450	3290	2970	2840	2720	1500	2000	9040	22
	6.25	3300	2860	2620	2500	2260	2160	2060	1500	2000	6960	22
2E	12.39	5060	4350	3990	3830	3440	3240	3160	2000	2500	9600	11
	14.88	5420	4690	4190	3910	3520	3370	3210	2000	2500	10570	11
	16.64	5420	4690	4190	3910	3520	3370	3210	2000	2500	10570	11
	19.48	5060	4350	3990	3830	3440	3240	3160	2000	2500	9600	11
	23.40	5420	4690	4190	3910	3520	3370	3210	2000	2500	10570	11
	29.48	4440	3830	3450	3290	2970	2840	2720	2000	2500	9040	11
	32.50	4440	3830	3450	3290	2970	2840	2720	2000	2500	9040	11
	43.75	3300	2860	2620	2500	2260	2160	2060	2000	2500	6960	11
	50.00	3300	2860	2620	2500	2260	2160	2060	2000	2500	6960	11
3E	42.24	5060	4350	3990	3830	3440	3240	3160	2000	2500	9600	8.4
	51.76	5060	4350	3990	3830	3440	3240	3160	2000	2500	9600	8.4
	59.29	5060	4350	3990	3830	3440	3240	3160	2000	2500	9600	8.4
	71.22	5420	4690	4190	3910	3520	3370	3210	2000	2500	10570	8.4
	84.37	5420	4690	4190	3910	3520	3370	3210	2000	2500	10570	8.4
	104.00	5420	4690	4190	3910	3520	3370	3210	2000	2500	10570	8.4
	119.04	5420	4690	4190	3910	3520	3370	3210	2000	2500	10570	8.4
	149.76	5240	4540	4070	3810	3440	3280	3140	2000	2500	10270	8.4
	187.20	5420	4690	4190	3910	3520	3370	3210	2000	2500	10570	8.4
	210.60	5240	4540	4070	3810	3440	3280	3140	2000	2500	10270	8.4
	269.10	5420	4690	4190	3910	3520	3370	3210	2000	2500	10570	8.4
	302.74	5240	4540	4070	3810	3440	3280	3140	2000	2500	10270	8.4
	349.83	4440	3830	3450	3290	2970	2840	2720	2000	2500	9040	8.4
	420.47	3300	2860	2620	2500	2260	2160	2060	2000	2500	6960	8.4
4E	305.08	5420	4690	4190	3910	3520	3370	3210	2000	2500	10570	7
	361.44	5420	4690	4190	3910	3520	3370	3210	2000	2500	10570	7
	413.07	5420	4690	4190	3910	3520	3370	3210	2000	2500	10570	7
	480.92	5420	4690	4190	3910	3520	3370	3210	2000	2500	10570	7
	589.72	5420	4690	4190	3910	3520	3370	3210	2000	2500	10570	7
	754.79	5420	4690	4190	3910	3520	3370	3210	2000	2500	10570	7
	849.14	5240	4540	4070	3810	3440	3280	3140	2000	2500	10270	7
	1042.47	5240	4540	4070	3810	3440	3280	3140	2000	2500	10270	7
	1194.10	5240	4540	4070	3810	3440	3280	3140	2000	2500	10270	7
	1498.55	5240	4540	4070	3810	3440	3280	3140	2000	2500	10270	7
	1716.52	5240	4540	4070	3810	3440	3280	3140	2000	2500	10270	7
	2119.16	4440	3830	3450	3290	2970	2840	2720	2000	2500	9040	7
	2490.47	3300	2860	2620	2500	2260	2160	2060	2000	2500	6960	7
	2852.72	3300	2860	2620	2500	2260	2160	2060	2000	2500	6960	7

241	i	T_2 [N.m] n2xh [r/minxh] 10000	25000	50000	100000	500000	1000000	2000000	n_1 [r/min]	n_{1max} [r/min]	T_{2max} [N.m]	P_t [kW]
CE	16.88	3300	2860	2620	2500	2260	2160	2060	1500	2000	6960	11
	21.88	3300	2860	2620	2500	2260	2160	2060	1500	2000	6960	11
C2E	33.45	5060	4350	3990	3830	3440	3240	3160	1500	2000	9600	8.3
	44.93	5420	4690	4190	3910	3520	3370	3210	1500	2000	10570	8.3
	52.60	5060	4350	3990	3830	3440	3240	3160	1500	2000	9600	8.3
	58.24	5420	4690	4190	3910	3520	3370	3210	1500	2000	10570	8.3
	68.18	5060	4350	3990	3830	3440	3240	3160	1500	2000	9600	8.3
	81.90	5420	4690	4190	3910	3520	3370	3210	1500	2000	10570	8.3
	103.19	4440	3830	3450	3290	2970	2840	2720	1500	2000	9040	8.3
	113.75	4440	3830	3450	3290	2970	2840	2720	1500	2000	9040	8.3
	153.13	3300	2860	2620	2500	2260	2160	2060	1500	2000	6960	8.3
	173.66	4440	3830	3450	3290	2970	2840	2720	1500	2000	9040	8.3
	191.43	4440	3830	3450	3290	2970	2840	2720	1500	2000	9040	8.3
	257.69	3300	2860	2620	2500	2260	2160	2060	1500	2000	6960	8.3
	294.50	3300	2860	2620	2500	2260	2160	2060	1500	2000	6960	8.3
C3E	248.81	5060	4350	3990	3830	3440	3240	3160	1500	2000	9600	7.2
	304.86	5060	4350	3990	3830	3440	3240	3160	1500	2000	9600	7.2
	349.20	5060	4350	3990	3830	3440	3240	3160	1500	2000	9600	7.2
	419.46	5420	4690	4190	3910	3520	3370	3210	1500	2000	10570	7.2
	496.94	5420	4690	4190	3910	3520	3370	3210	1500	2000	10570	7.2
	612.56	5420	4690	4190	3910	3520	3370	3210	1500	2000	10570	7.2
	701.15	5420	4690	4190	3910	3520	3370	3210	1500	2000	10570	7.2
	882.09	5240	4540	4070	3810	3440	3280	3140	1500	2000	10270	7.2
	1102.61	5420	4690	4190	3910	3520	3370	3210	1500	2000	10570	7.2
	1240.43	5240	4540	4070	3810	3440	3280	3140	1500	2000	10270	7.2

CHBNS 传承之道 稳行致远
THE WAY OF INHERITANCE IS STEADY AND FAR-REACHING
传动装置专业制造商
PROFESSIONAL MANUFACTURER OF TRANSMISSION DEVICE
N series 系列

240C1Z
241C1Z

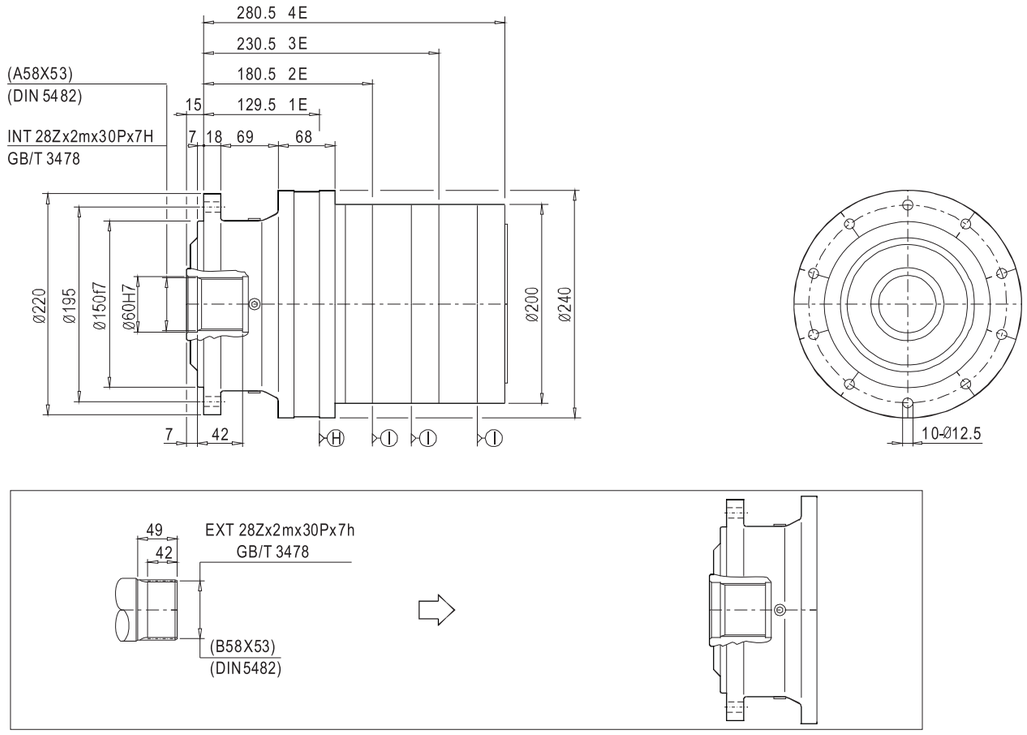

240C1H
241C1H

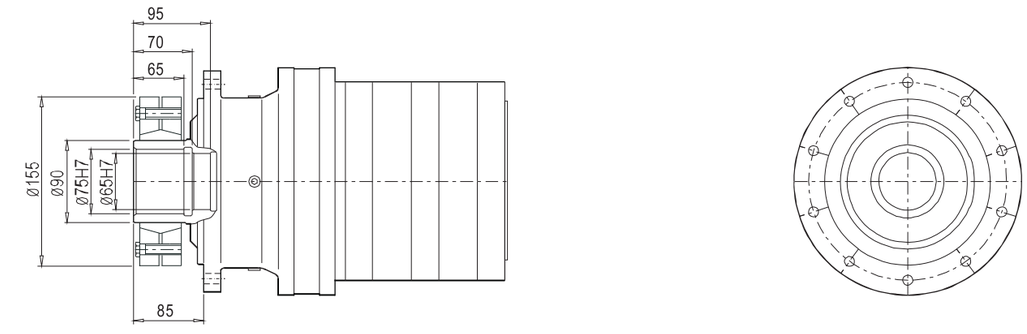

240C1C
241C1C

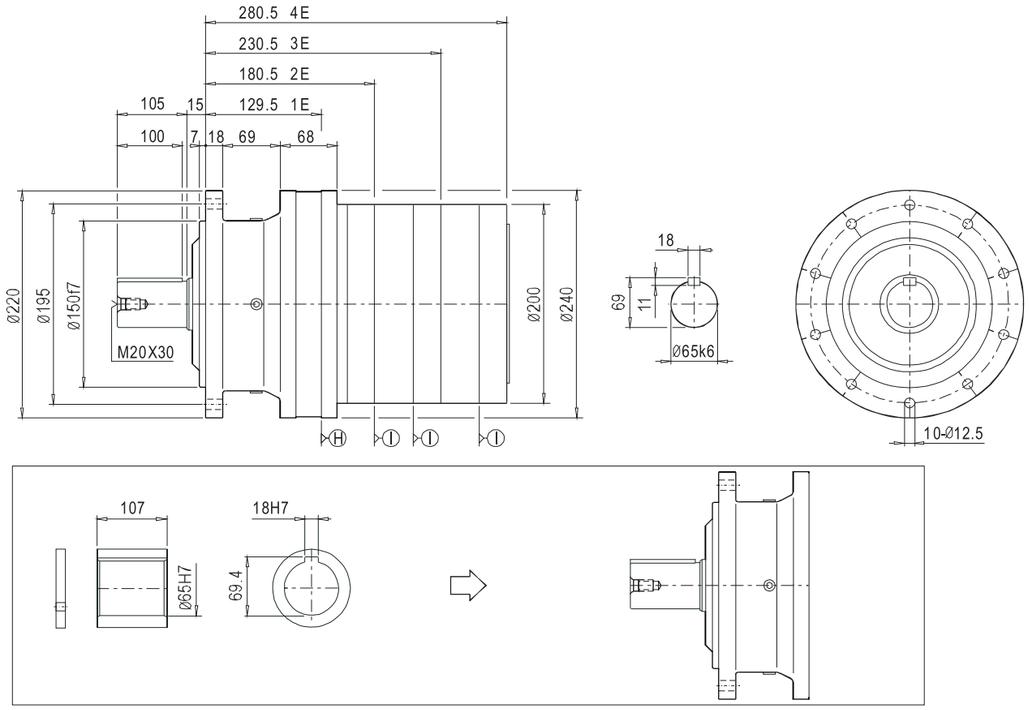

240C1S
241C1S

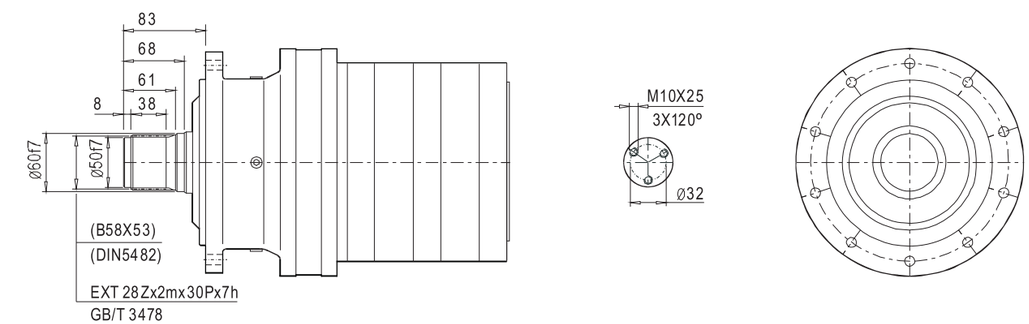

CHBNS 传承之道 稳行致远
THE WAY OF INHERITANCE IS STEADY AND FAR-REACHING
传动装置专业制造商
PROFESSIONAL MANUFACTURER OF TRANSMISSION DEVICE
N series 系列

240C2Z
241C2Z

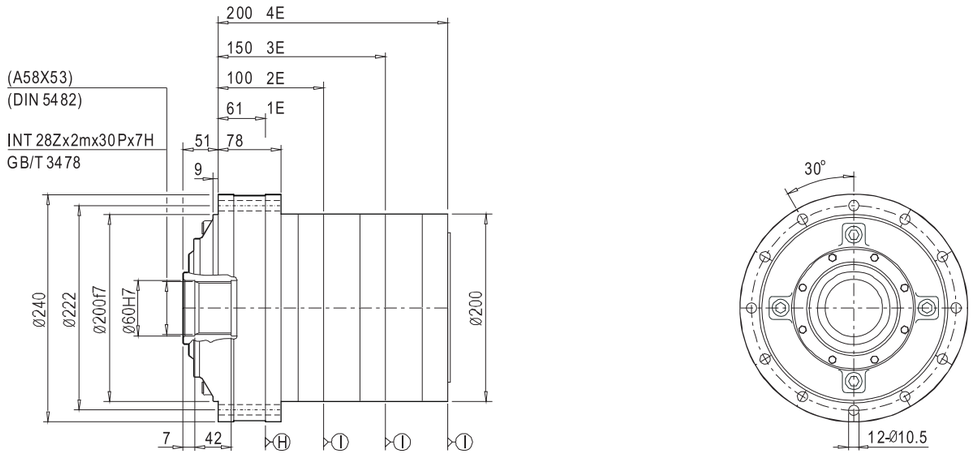

240R2Z
241R2Z

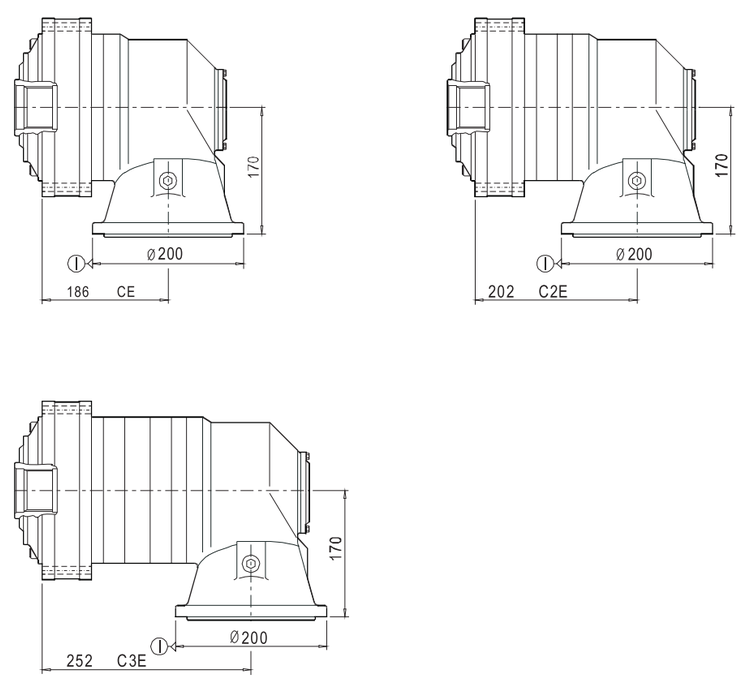

240R1C(S)
241R1C(S)

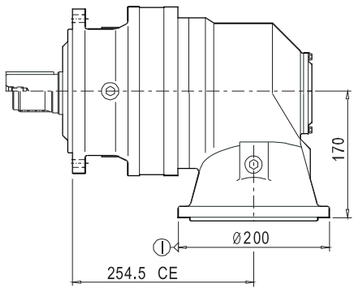

240R1Z(H)
241R1Z(H)

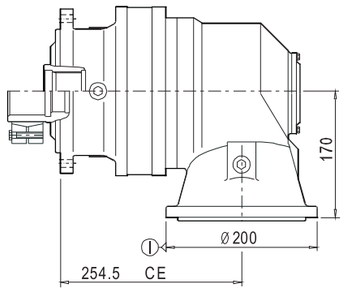

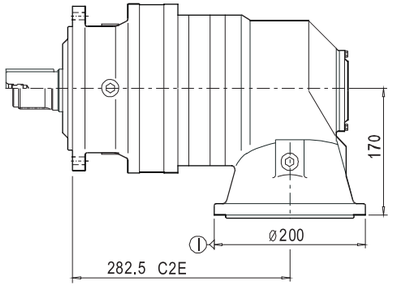

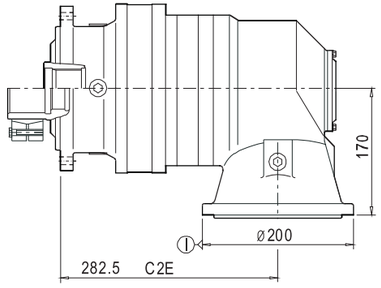

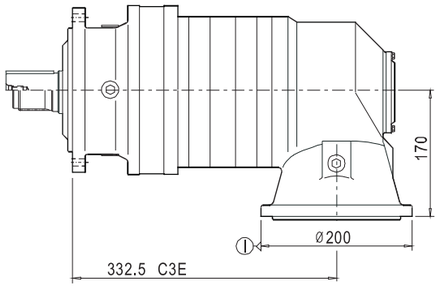

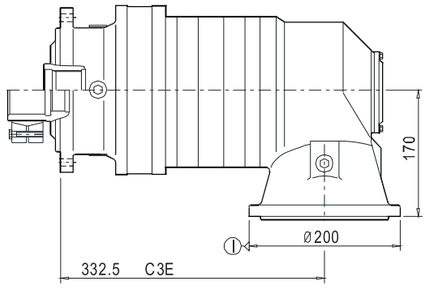

CHBNS 传承之道 稳行致远
THE WAY OF INHERITANCE IS STEADY AND FAR-REACHING
传动装置专业制造商
PROFESSIONAL MANUFACTURER OF TRANSMISSION DEVICE
N series 系列

280	i	T_2 [N.m]							n_1	n_{1max}	T_{2max}	P_t
		n_{2xh} [r/minxh]										
		10000	25000	50000	100000	500000	1000000	2000000	[r/min]	[r/min]	[N.m]	[kW]
1E	3.15	5280	4550	4060	3740	3350	3200	3050	1200	1500	9390	31
	3.33	5070	4400	3930	3610	3230	3060	2930	1200	1500	9160	31
	3.55	5450	4700	4200	3820	3440	3270	3140	1200	1800	9930	31
	4.11	5320	4600	4110	3710	3350	3210	3060	1500	2000	9860	31
	4.5	5110	4430	3970	3570	3230	3090	2960	1500	2000	9430	31
	5	4150	3590	3220	3000	2710	2590	2470	1500	2000	8000	31
	5.65	3700	3210	2880	2700	2430	2330	2220	1500	2000	7400	31
	6.26	3500	3040	2730	2590	2330	2240	2130	1500	2000	7100	31
	7.05	2750	2380	2130	2050	1850	1760	1680	1500	2000	5640	31
	8.12	2550	2200	2030	1940	1750	1680	1610	1500	2000	5390	31
2E	12.95	5280	4550	4060	3740	3350	3200	3050	1500	2000	9390	17
	14.59	5450	4700	4200	3820	3440	3270	3140	1500	2000	9930	17
	17.75	5450	4700	4200	3820	3440	3270	3140	1500	2000	9930	17
	22.19	5450	4700	4200	3820	3440	3270	3140	1500	2000	9930	17
	25.69	5320	4600	4110	3710	3350	3210	3060	1500	2000	9860	17
	28.77	5320	4600	4110	3710	3350	3210	3060	1500	2000	9860	17
	36.00	5110	4430	3970	3570	3230	3090	2960	1500	2000	9430	17
	40.00	4150	3590	3220	3000	2710	2590	2470	1500	2000	8000	17
	45.20	3700	3210	2880	2700	2430	2330	2220	1500	2000	7400	17
3E	42.38	5280	4550	4060	3740	3350	3200	3050	2000	2500	9390	12
	49.54	5280	4550	4060	3740	3350	3200	3050	2000	2500	9390	12
	59.48	5280	4550	4060	3740	3350	3200	3050	2000	2500	9390	12
	71.46	5450	4700	4200	3820	3440	3270	3140	2000	2500	9930	12
	82.73	5450	4700	4200	3820	3440	3270	3140	2000	2500	9930	12
	99.84	5450	4700	4200	3820	3440	3270	3140	2000	2500	9930	12
	125.80	5450	4700	4200	3820	3440	3270	3140	2000	2500	9930	12
	155.31	5450	4700	4200	3820	3440	3270	3140	2000	2500	9930	12
	179.81	5320	4600	4110	3710	3350	3210	3060	2000	2500	9860	12
	205.50	5320	4600	4110	3710	3350	3210	3060	2000	2500	9860	12
	250.00	4150	3590	3220	3000	2710	2590	2470	2000	2500	8000	12
	295.41	5320	4600	4110	3710	3350	3210	3060	2000	2500	9860	12
	359.38	4150	3590	3220	3000	2710	2590	2470	2000	2500	8000	12
4E	255.18	5280	4550	4060	3740	3350	3200	3050	2000	2500	9390	9.4
	296.64	5280	4550	4060	3740	3350	3200	3050	2000	2500	9390	9.4
	356.40	5450	4700	4200	3820	3440	3270	3140	2000	2500	9930	9.4
	412.62	5450	4700	4200	3820	3440	3270	3140	2000	2500	9930	9.4
	495.38	5450	4700	4200	3820	3440	3270	3140	2000	2500	9930	9.4
	615.04	5450	4700	4200	3820	3440	3270	3140	2000	2500	9930	9.4
	702.90	5450	4700	4200	3820	3440	3270	3140	2000	2500	9930	9.4
	830.56	5450	4700	4200	3820	3440	3270	3140	2000	2500	9930	9.4
	1010.42	5450	4700	4200	3820	3440	3270	3140	2000	2500	9930	9.4
	1205.97	5320	4600	4110	3710	3350	3210	3060	2000	2500	9860	9.4
	1519.52	5320	4600	4110	3710	3350	3210	3060	2000	2500	9860	9.4
	1833.89	5110	4430	3970	3570	3230	3090	2960	2000	2500	9430	9.4
	2021.48	5110	4430	3970	3570	3230	3090	2960	2000	2500	9430	9.4
	2515.63	4150	3590	3220	3000	2710	2590	2470	2000	2500	8000	9.4

280	i	T_2 [N.m] n2xh [r/minxh] 10000	25000	50000	100000	500000	1000000	2000000	n_1 [r/min]	n_{1max} [r/min]	T_{2max} [N.m]	P_t [kW]
CE	8.97	5280	4550	4060	3740	3350	3200	3050	1500	2000	9390	15
	9.48	5070	4400	3930	3610	3230	3060	2930	1500	2000	9160	15
	12.81	5110	4430	3970	3570	3230	3090	2960	1500	2000	9430	15
	14.23	4150	3590	3220	3000	2710	2590	2470	1500	2000	8000	15
	18.38	5110	4430	3970	3570	3230	3090	2960	1500	2000	9430	15
	20.42	4150	3590	3220	3000	2710	2590	2470	1500	2000	8000	15
	23.07	3700	3210	2880	2700	2430	2330	2220	1500	2000	7400	15
	29.44	4150	3590	3220	3000	2710	2590	2470	1500	2000	8000	15
	36.86	3500	3040	2730	2590	2330	2240	2130	1500	2000	7100	15
C2E	34.96	5280	4550	4060	3740	3350	3200	3050	1500	2000	9390	12
	39.39	5450	4700	4200	3820	3440	3270	3140	1500	2000	9930	12
	47.93	5450	4700	4200	3820	3440	3270	3140	1500	2000	9930	12
	59.91	5450	4700	4200	3820	3440	3270	3140	1500	2000	9930	12
	76.25	5450	4700	4200	3820	3440	3270	3140	1500	2000	9930	12
	85.94	5450	4700	4200	3820	3440	3270	3140	1500	2000	9930	12
	104.55	5450	4700	4200	3820	3440	3270	3140	1500	2000	9930	12
	130.68	5450	4700	4200	3820	3440	3270	3140	1500	2000	9930	12
	151.30	5320	4600	4110	3710	3350	3210	3060	1500	2000	9860	12
	169.46	5320	4600	4110	3710	3350	3210	3060	1500	2000	9860	12
	212.04	5110	4430	3970	3570	3230	3090	2960	1500	2000	9430	12
	235.60	4150	3590	3220	3000	2710	2590	2470	1500	2000	8000	12
	266.23	3700	3210	2880	2700	2430	2330	2220	1500	2000	7400	12
C3E	249.60	5280	4550	4060	3740	3350	3200	3050	1500	2000	9390	8.3
	291.78	5280	4550	4060	3740	3350	3200	3050	1500	2000	9390	8.3
	350.31	5280	4550	4060	3740	3350	3200	3050	1500	2000	9390	8.3
	420.88	5450	4700	4200	3820	3440	3270	3140	1500	2000	9930	8.3
	487.27	5450	4700	4200	3820	3440	3270	3140	1500	2000	9930	8.3
	588.08	5450	4700	4200	3820	3440	3270	3140	1500	2000	9930	8.3
	740.98	5450	4700	4200	3820	3440	3270	3140	1500	2000	9930	8.3
	914.79	5450	4700	4200	3820	3440	3270	3140	1500	2000	9930	8.3
	1059.10	5320	4600	4110	3710	3350	3210	3060	1500	2000	9860	8.3
	1210.40	5320	4600	4110	3710	3350	3210	3060	1500	2000	9860	8.3
	1472.50	4150	3590	3220	3000	2710	2590	2470	1500	2000	8000	8.3

CHBNS 传承之道 稳行致远
THE WAY OF INHERITANCE IS STEADY AND FAR-REACHING
传动装置专业制造商
PROFESSIONAL MANUFACTURER OF TRANSMISSION DEVICE
N series 系列

281	i	T_2 [N.m] n2xh [r/minxh] 10000	25000	50000	100000	500000	1000000	2000000	n_1 [r/min]	n_{1max} [r/min]	T_{2max} [N.m]	P_t [kW]
1E	3.33	6460	5610	5000	4720	4220	4030	3860	1200	1500	12240	31
	4.5	6550	5660	5080	4700	4240	4070	3880	1500	2000	12660	31
	5.2	5550	4820	4320	4140	3730	3570	3410	1500	2000	11340	31
	5.65	4740	4100	3700	3530	3180	3050	2920	1500	2000	9860	31
	6.26	4470	3890	3550	3400	3060	2910	2790	1500	2000	9500	31
2E	13.69	9110	7870	7210	6880	6180	5890	5620	1500	2000	18390	17
	14.99	9110	7870	7210	6880	6180	5890	5620	1500	2000	18390	17
	17.32	9110	7870	7210	6880	6180	5890	5620	1500	2000	18390	17
	20.81	9110	7870	7210	6880	6180	5890	5620	1500	2000	18390	17
	26.44	8410	7080	6560	6150	5540	5050	4820	1500	2000	16000	17
	31.50	6550	5660	5080	4700	4240	4070	3880	1500	2000	12660	17
	36.40	5550	4820	4320	4140	3730	3570	3410	1500	2000	11340	17
	41.60	5550	4820	4320	4140	3730	3570	3410	1500	2000	11340	17
3E	44.80	9110	7870	7210	6880	6180	5890	5620	2000	2500	18390	12
	49.12	9110	7870	7210	6880	6180	5890	5620	2000	2500	18390	12
	58.52	9110	7870	7210	6880	6180	5890	5620	2000	2500	18390	12
	74.18	9110	7870	7210	6880	6180	5890	5620	2000	2500	18390	12
	85.71	9110	7870	7210	6880	6180	5890	5620	2000	2500	18390	12
	98.18	9110	7870	7210	6880	6180	5890	5620	2000	2500	18390	12
	130.08	9110	7870	7210	6880	6180	5890	5620	2000	2500	18390	12
	149.90	8410	7080	6560	6150	5540	5050	4820	2000	2500	16000	12
	185.06	8410	7080	6560	6150	5540	5050	4820	2000	2500	16000	12
	211.50	8410	7080	6560	6150	5540	5050	4820	2000	2500	16000	12
	252.00	6550	5660	5080	4700	4240	4070	3880	2000	2500	12660	12
	293.42	6550	5660	5080	4700	4240	4070	3880	2000	2500	12660	12
	293.42	6550	5660	5080	4700	4240	4070	3880	2000	2500	12660	12
	418.6	5550	4820	4320	4140	3730	3570	3410	2000	2500	11340	12
4E	221.76	9110	7870	7210	6880	6180	5890	5620	2000	2500	18390	9.4
	254.01	9110	7870	7210	6880	6180	5890	5620	2000	2500	18390	9.4
	298.49	9110	7870	7210	6880	6180	5890	5620	2000	2500	18390	9.4
	366.58	9110	7870	7210	6880	6180	5890	5620	2000	2500	18390	9.4
	424.41	9110	7870	7210	6880	6180	5890	5620	2000	2500	18390	9.4
	485.04	9110	7870	7210	6880	6180	5890	5620	2000	2500	18390	9.4
	593.41	9110	7870	7210	6880	6180	5890	5620	2000	2500	18390	9.4
	685.71	9110	7870	7210	6880	6180	5890	5620	2000	2500	18390	9.4
	826.05	9110	7870	7210	6880	6180	5890	5620	2000	2500	18390	9.4
	1040.63	9110	7870	7210	6880	6180	5890	5620	2000	2500	18390	9.4
	1184.75	9110	7870	7210	6880	6180	5890	5620	2000	2500	18390	9.4
	1495.90	9110	7870	7210	6880	6180	5890	5620	2000	2500	18390	9.4
	1723.86	8410	7080	6560	6150	5540	5050	4820	2000	2500	16000	9.4
	2128.22	8410	7080	6560	6150	5540	5050	4820	2000	2500	16000	9.4
	2616.25	5550	4820	4320	4140	3730	3570	3410	2000	2500	11340	9.4
	2930.20	5550	4820	4320	4140	3730	3570	3410	2000	2500	11340	9.4

281	i	T_2 [N.m] n2xh [r/minxh] 10000	25000	50000	100000	500000	1000000	2000000	n_1 [r/min]	n_{1max} [r/min]	T_{2max} [N.m]	P_t [kW]
CE	9.48	6460	5610	5000	4720	4220	4030	3860	1500	2000	12240	15
	12.81	6550	5660	5080	4700	4240	4070	3880	1500	2000	12660	15
	14.80	5550	4820	4320	4140	3730	3570	3410	1500	2000	11340	15
	17.82	4470	3890	3550	3400	3060	2910	2790	1500	2000	9500	15
	21.23	5550	4820	4320	4140	3730	3570	3410	1500	2000	11340	15
	25.56	4470	3890	3550	3400	3060	2910	2790	1500	2000	9500	15
	36.86	4470	3890	3550	3400	3060	2910	2790	1500	2000	9500	15
C2E	46.75	9110	7870	7210	6880	6180	5890	5620	1500	2000	18390	15
	60.61	9110	7870	7210	6880	6180	5890	5620	1500	2000	18390	15
	72.84	9110	7870	7210	6880	6180	5890	5620	1500	2000	18390	12
	76.99	8410	7080	6560	6150	5540	5050	4820	1500	2000	16000	12
	92.53	8410	7080	6560	6150	5540	5050	4820	1500	2000	16000	12
	122.59	9110	7870	7210	6880	6180	5890	5620	1500	2000	18390	12
	155.72	8410	7080	6560	6150	5540	5050	4820	1500	2000	16000	12
	185.54	6550	5660	5080	4700	4240	4070	3880	1500	2000	12660	12
	214.40	5550	4820	4320	4140	3730	3570	3410	1500	2000	11340	12
	245.02	5550	4820	4320	4140	3730	3570	3410	1500	2000	11340	12
C3E	263.87	9110	7870	7210	6880	6180	5890	5620	1500	2000	18390	8.3
	289.34	9110	7870	7210	6880	6180	5890	5620	1500	2000	18390	8.3
	344.66	9110	7870	7210	6880	6180	5890	5620	1500	2000	18390	8.3
	436.90	9110	7870	7210	6880	6180	5890	5620	1500	2000	18390	8.3
	504.86	9110	7870	7210	6880	6180	5890	5620	1500	2000	18390	8.3
	578.29	9110	7870	7210	6880	6180	5890	5620	1500	2000	18390	8.3
	766.16	9110	7870	7210	6880	6180	5890	5620	1500	2000	18390	8.3
	882.91	8410	7080	6560	6150	5540	5050	4820	1500	2000	16000	8.3
	1090.02	8410	7080	6560	6150	5540	5050	4820	1500	2000	16000	8.3
	1245.74	8410	7080	6560	6150	5540	5050	4820	1500	2000	16000	8.3
	1484.28	6550	5660	5080	4700	4240	4070	3880	1500	2000	12660	8.3

CHBNS 传承之道 稳行致远
THE WAY OF INHERITANCE IS STEADY AND FAR-REACHING
传动装置专业制造商
PROFESSIONAL MANUFACTURER OF TRANSMISSION DEVICE
N series 系列

280C1Z
281C1Z

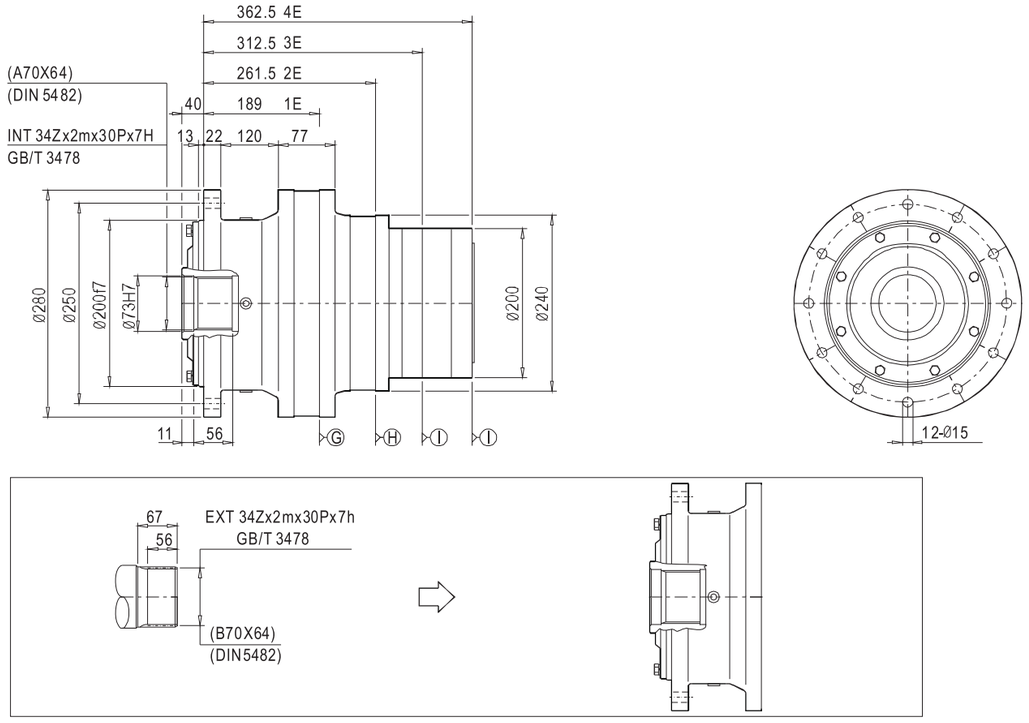

280C1Z
281C1Z

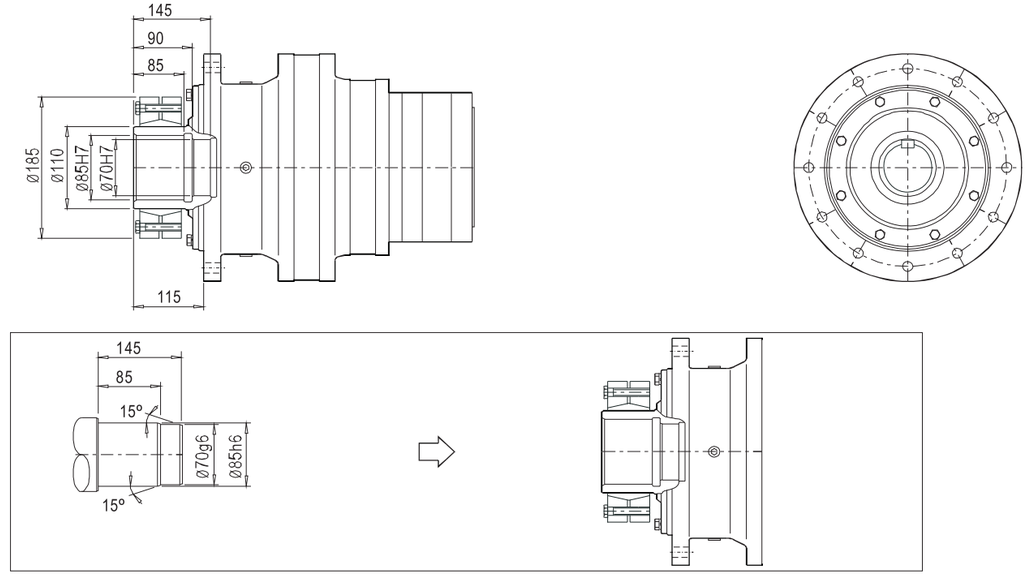

280C1C
281C1C

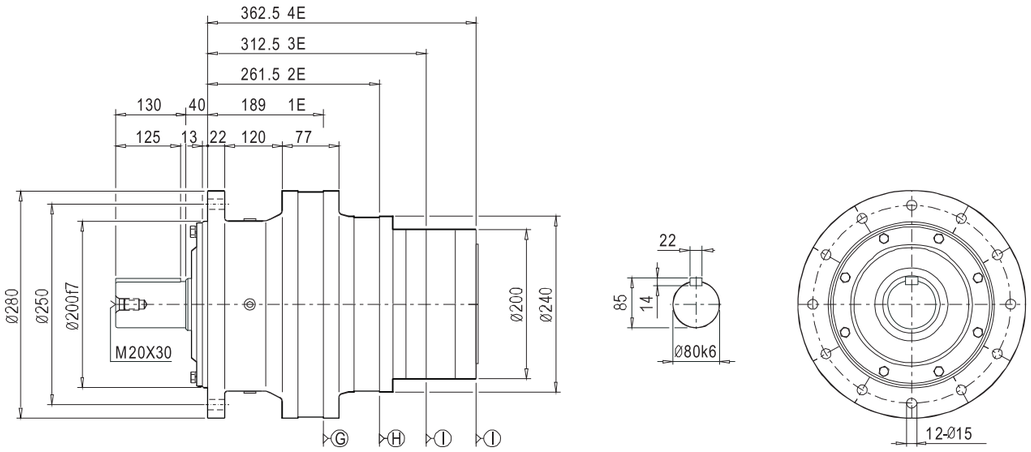

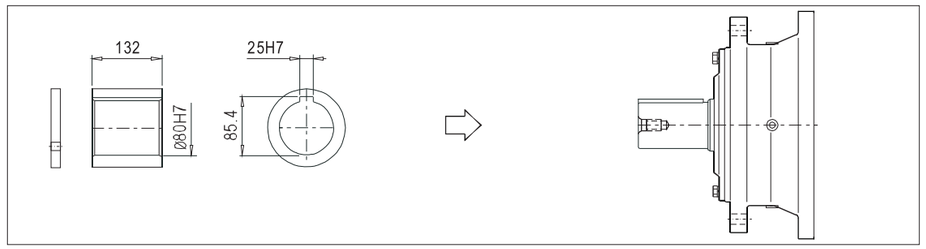

280C1S
281C1S

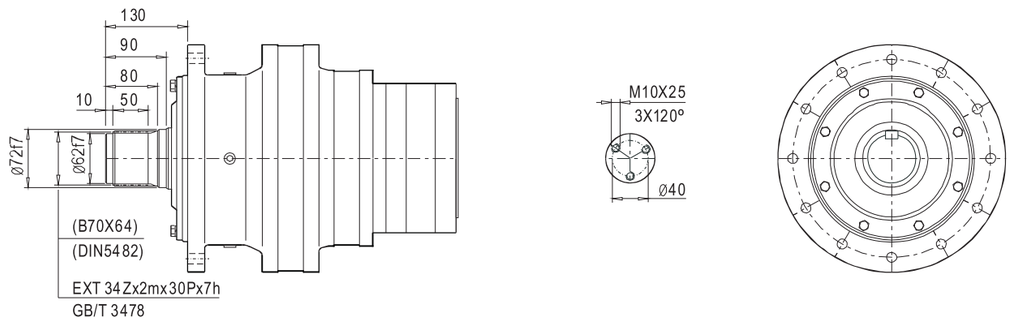

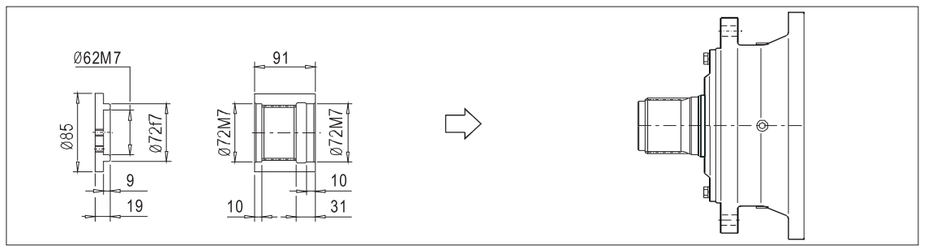

CHBNS 传承之道 稳行致远
THE WAY OF INHERITANCE IS STEADY AND FAR-REACHING
传动装置专业制造商
PROFESSIONAL MANUFACTURER OF TRANSMISSION DEVICE
N series 系列

280C2Z
281C2Z

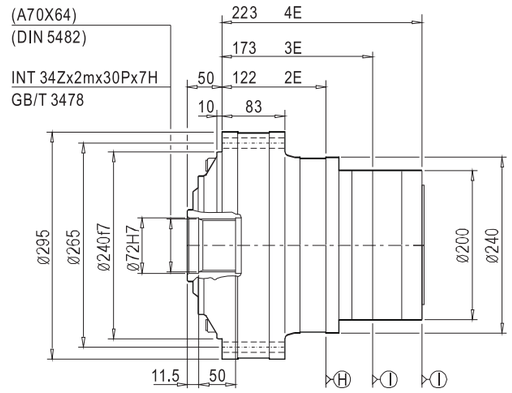

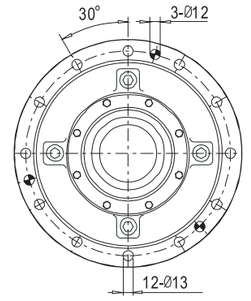

280R2Z
281R2Z

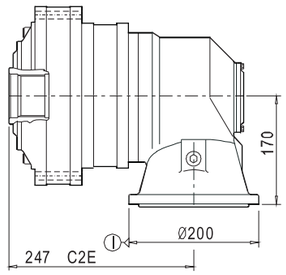

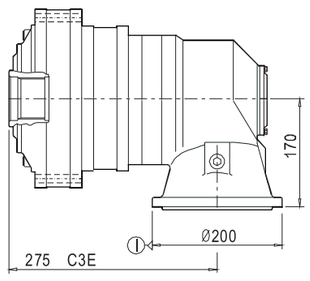

280R1C(S)
281R1C(S)

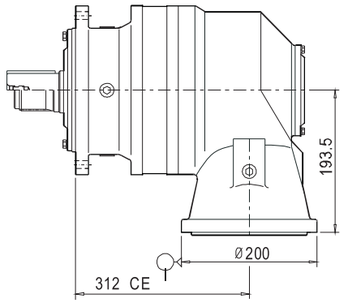

280R1Z(H)
281R1Z(H)

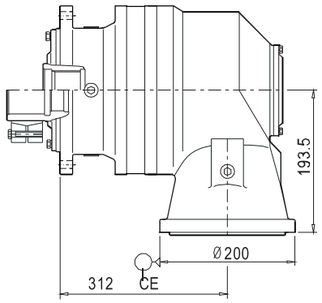

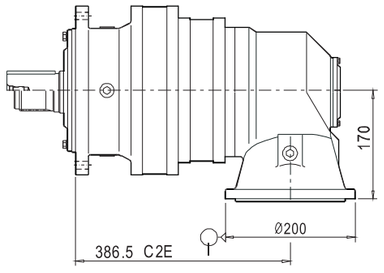

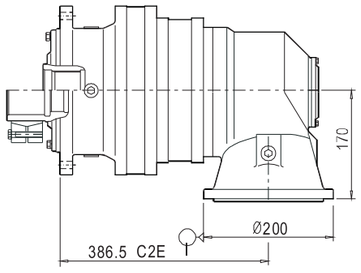

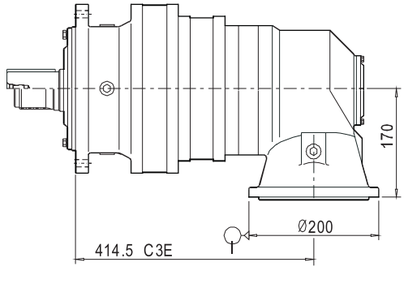

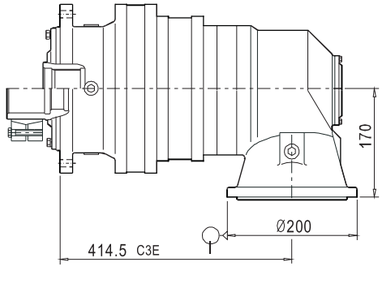

CHBNS 传承之道 稳行致远
THE WAY OF INHERITANCE IS STEADY AND FAR-REACHING
传动装置专业制造商
PROFESSIONAL MANUFACTURER OF TRANSMISSION DEVICE
N series 系列

353 354	i	T2 [N.m] n2xh [r/minxh] 10000	25000	50000	100000	500000	1000000	2000000	n1 [r/min]	n1max [r/min]	T2max [N.m]	Pt [kW]
1E	3.18	19500	16850	15100	13700	12330	11780	11240	1200	1500	34670	40
	3.64	16280	14090	12600	11510	10360	9900	9460	1200	1800	29690	40
	3.96	16560	14350	12850	11630	10490	10030	9590	1500	2000	30680	40
	4.36	15350	13320	11940	10900	9830	9400	9000	1500	2000	28980	40
	4.89	11370	9900	8880	8250	7560	7230	6900	1500	2000	21910	40
	5.67	10060	8710	7800	7330	6600	6300	6020	1500	2000	20060	40
	6.25	9640	8350	7480	7110	6420	6130	5860	1500	2000	19500	40
	7	7560	6540	5910	5640	5090	4870	4640	1500	2000	15580	40
2E	13.19	16560	14350	12850	11630	10490	10030	9590	1500	1500	34670	23
	15.84	16560	14350	12850	11630	10490	10030	9590	1500	2000	30680	23
	17.44	15350	13320	11940	10900	9830	9400	9000	1500	2000	28980	23
	22.67	15350	13320	11940	10900	9830	9400	9000	1500	2000	28980	23
	25.43	11370	9900	8880	8250	7560	7230	6900	1500	2000	21910	23
	30.56	11370	9900	8880	8250	7560	7230	6900	1500	2000	21910	23
	35.44	10060	8710	7800	7330	6600	6300	6020	1500	2000	20060	23
	39.06	9640	8350	7480	7110	6420	6130	5860	1500	2000	19500	23
	49.00	7560	6540	5910	5640	5090	4870	4640	1500	2000	15580	23
3E	45.76	16560	14350	12850	11630	10490	10030	9590	1200	1500	30680	15
	53.27	16560	14350	12850	11630	10490	10030	9590	2000	2500	31970	15
	63.99	16560	14350	12850	11630	10490	10030	9590	2000	2500	30680	15
	70.17	16560	14350	12850	11630	10490	10030	9590	2000	2500	30680	15
	86.33	15350	13320	11940	10900	9830	9400	9000	2000	2500	28980	15
	97.12	15350	13320	11940	10900	9830	9400	9000	2000	2500	28980	15
	128.55	15350	13320	11940	10900	9830	9400	9000	2000	2500	28980	15
	141.70	15350	13320	11940	10900	9830	9400	9000	2000	2500	28980	15
	173.29	11370	9900	8880	8250	7560	7230	6900	2000	2500	21910	15
	213.94	11370	9900	8880	8250	7560	7230	6900	2000	2500	21910	15
	244.50	11370	9900	8880	8250	7560	7230	6900	2000	2500	21910	15
	312.50	9640	8350	7480	7110	6420	6130	5860	2000	2500	19500	15
	350.00	7560	6540	5910	5640	5090	4870	4640	2000	2500	15580	15
	456.44	7560	6540	5910	5640	5090	4870	4640	2000	2500	15580	15
4E	258.53	16560	14350	12850	11630	10490	10030	9590	2000	2500	30680	11
	316.77	16560	14350	12850	11630	10490	10030	9590	2000	2500	30680	11
	362.84	16560	14350	12850	11630	10490	10030	9590	2000	2500	30680	11
	447.96	16560	14350	12850	11630	10490	10030	9590	2000	2500	30680	11
	511.95	16560	14350	12850	11630	10490	10030	9590	2000	2500	30680	11
	618.07	15350	13320	11940	10900	9830	9400	9000	2000	2500	28980	11
	695.33	15350	13320	11940	10900	9830	9400	9000	2000	2500	28980	11
	864.31	11370	9900	8880	8250	7560	7230	6900	2000	2500	21910	11
	947.74	11370	9900	8880	8250	7560	7230	6900	2000	2500	21910	11
	1210.28	11370	9900	8880	8250	7560	7230	6900	2000	2500	21910	11
	1528.13	11370	9900	8880	8250	7560	7230	6900	2000	2500	21910	11
	1739.77	11370	9900	8880	8250	7560	7230	6900	2000	2500	21910	11
	2196.68	11370	9900	8880	8250	7560	7230	6900	2000	2500	21910	11
	2547.07	10060	8710	7800	7330	6600	6300	6020	2000	2500	20060	11
	3144.53	9640	8350	7480	7110	6420	6130	5860	2000	2500	19500	11

353 354	i	T_2 [N.m]							n_1	n_{1max}	T_{2max}	P_t
		$n_2$xh [r/minxh]										
		10000	25000	50000	100000	500000	1000000	2000000	[r/min]	[r/min]	[N.m]	[kW]
CE...A	6.60	18530	16010	14350	13020	11720	11200	10680	1500	2000	32940	50
	10.24	16280	14090	12600	11510	10360	9900	9460	1500	2000	29690	50
	12.26	15350	13320	11940	10900	9830	9400	9000	1500	2000	28980	50
	13.75	11370	9900	8880	8250	7560	7230	6900	1500	2000	21910	50
	17.44	15350	13320	11940	10900	9830	9400	9000	1500	2000	28980	50
	22.68	10060	8710	7800	7330	6600	6300	6020	1500	2000	20060	50
	25.00	9640	8350	7480	7110	6420	6130	5860	1500	2000	19500	50
	28.12	11370	7700	7370	7040	6350	6080	5810	1500	2000	21910	50
	32.60	10060	8710	7800	7330	6600	6300	6020	1500	2000	20060	50
CE...B	13.92	10240	6930	6640	6340	5720	5480	5230	1500	2000	19720	18
	16.14	10060	8710	7800	7330	6600	6300	6020	1500	2000	20060	18
	17.79	9640	8350	7480	7110	6420	6130	5860	1500	2000	19500	18
	19.92	7560	6540	5910	5640	5090	4870	4640	1500	2000	15580	18
	28.58	7560	6540	5910	5640	5090	4870	4640	1500	2000	15580	18
C2E...A	37.53	16560	14350	12850	11630	10490	10030	9590	1500	2000	30680	17
	45.08	16560	14350	12850	11630	10490	10030	9590	1500	2000	30680	17
	49.64	15350	13320	11940	10900	9830	9400	9000	1500	2000	28980	17
	64.53	15350	13320	11940	10900	9830	9400	9000	1500	2000	28980	17
	71.21	15350	13320	11940	10900	9830	9400	9000	1500	2000	28980	17
	92.58	15350	13320	11940	10900	9830	9400	9000	1500	2000	28980	17
	102.70	15350	13320	11940	10900	9830	9400	9000	1500	2000	28980	17
	133.51	15350	13320	11940	10900	9830	9400	9000	1500	2000	28980	17
	149.77	11370	9900	8880	8250	7560	7230	6900	1500	2000	21910	17
	180.01	11370	9900	8880	8250	7560	7230	6900	1500	2000	21910	17
C2E...B	68.66	11370	9900	8880	8250	7560	7230	6900	1500	2000	21910	15
	82.52	11370	9900	8880	8250	7560	7230	6900	1500	2000	21910	15
	95.68	10060	8710	7800	7330	6600	6300	6020	1500	2000	20060	15
	124.03	10060	8710	7800	7330	6600	6300	6020	1500	2000	20060	15
	136.72	9640	8350	7480	7110	6420	6130	5860	1500	2000	19500	15
	171.50	7560	6540	5910	5640	5090	4870	4640	1500	2000	15580	15
	208.73	10060	8710	7800	7330	6600	6300	6020	1500	2000	20060	15
	230.08	9640	8350	7480	7110	6420	6130	5860	1500	2000	19500	15
	288.61	7560	6540	5910	5640	5090	4870	4640	1500	2000	15580	15
C3E	269.52	16560	14350	12850	11630	10490	10030	9590	1500	2000	30680	10
	313.79	16560	14350	12850	11630	10490	10030	9590	1500	2000	30680	10
	376.92	16560	14350	12850	11630	10490	10030	9590	1500	2000	30680	10
	413.31	16560	14350	12850	11630	10490	10030	9590	1500	2000	30680	10
	508.47	15350	13320	11940	10900	9830	9400	9000	1500	2000	28980	10
	572.03	15350	13320	11940	10900	9830	9400	9000	1500	2000	28980	10
	757.16	15350	13320	11940	10900	9830	9400	9000	1500	2000	28980	10
	834.61	15350	13320	11940	10900	9830	9400	9000	1500	2000	28980	10
	1020.67	11370	9900	8880	8250	7560	7230	6900	1500	2000	21910	10
	1260.09	11370	9900	8880	8250	7560	7230	6900	1500	2000	21910	10
	1440.11	11370	9900	8880	8250	7560	7230	6900	1500	2000	21910	10
	1840.63	9640	8350	7480	7110	6420	6130	5860	1500	2000	19500	10
	2061.50	7560	6540	5910	5640	5090	4870	4640	1500	2000	15580	10

CHBNS 传承之道 稳行致远
THE WAY OF INHERITANCE IS STEADY AND FAR-REACHING
传动装置专业制造商
PROFESSIONAL MANUFACTURER OF TRANSMISSION DEVICE
N series 系列

353C1Z

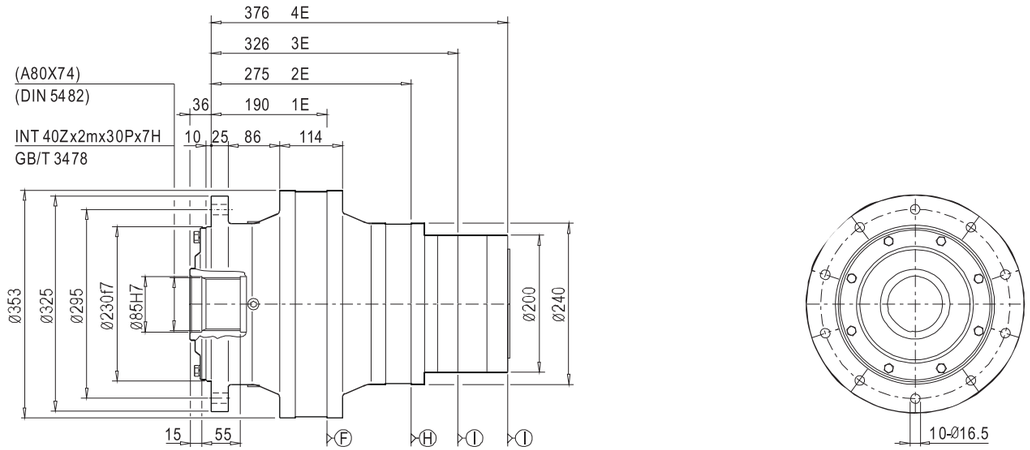

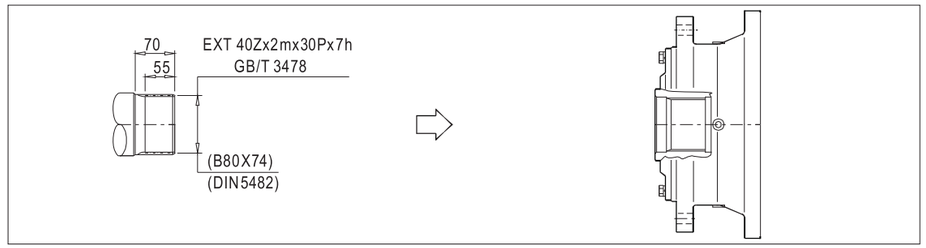

353C1H

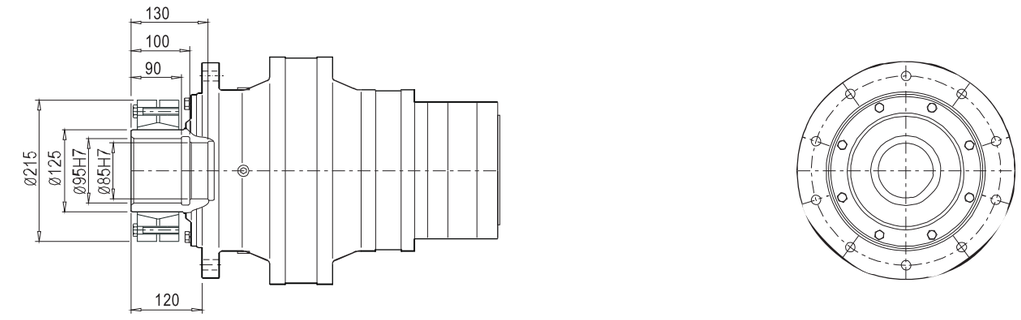

353C1C

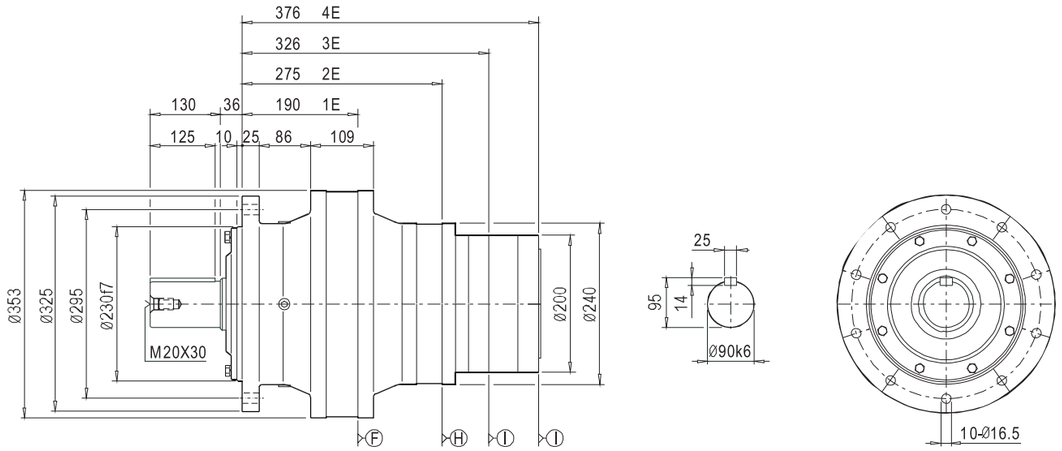

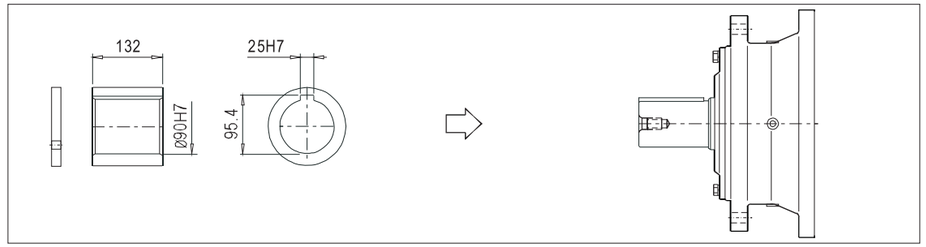

353C1S

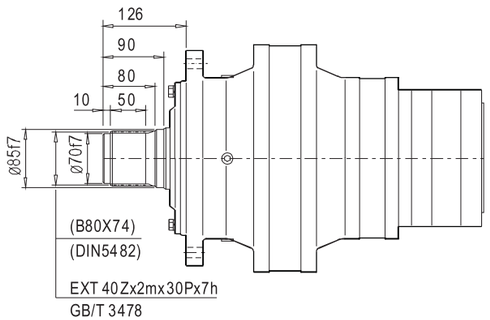



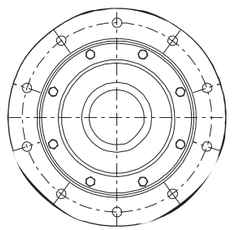

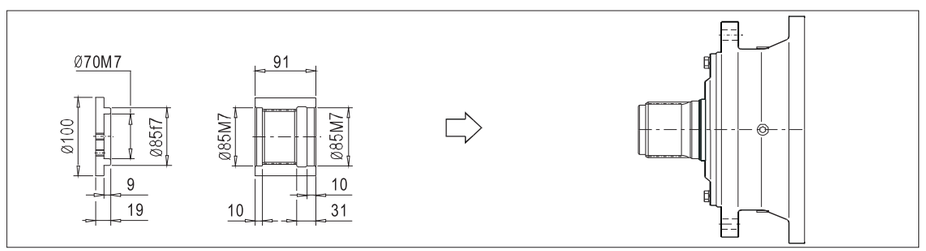

CHBNS 传承之道 稳行致远
THE WAY OF INHERITANCE IS STEADY AND FAR-REACHING
传动装置专业制造商
PROFESSIONAL MANUFACTURER OF TRANSMISSION DEVICE
N series 系列

353R1C(S)

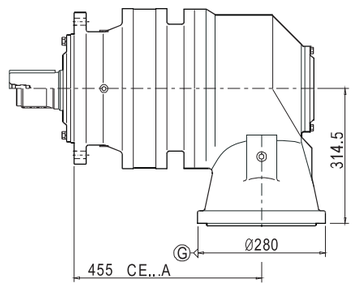

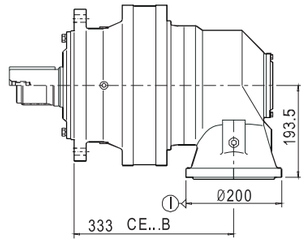

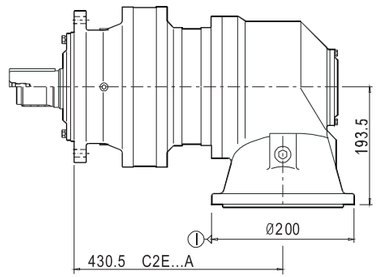

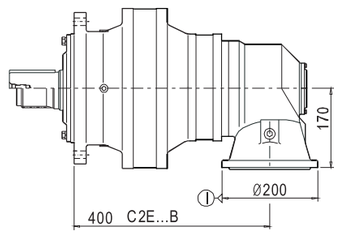

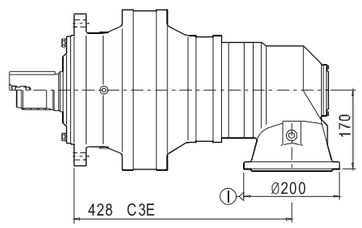

353R1Z(H)

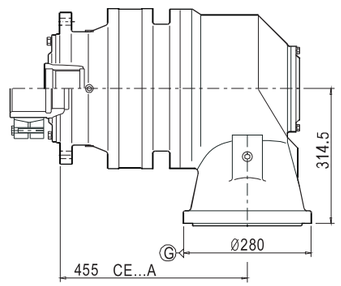

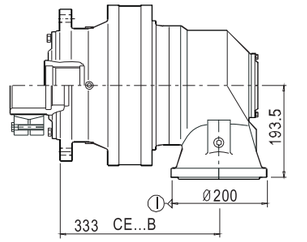

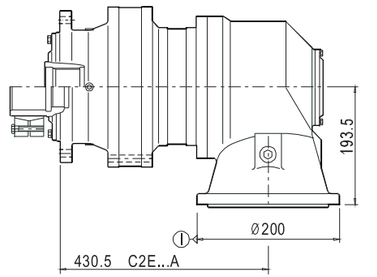

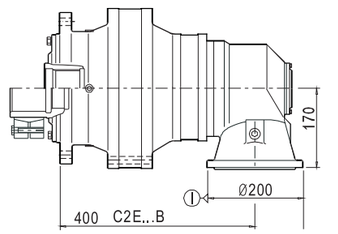

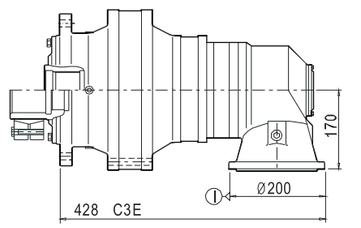

354C2Z

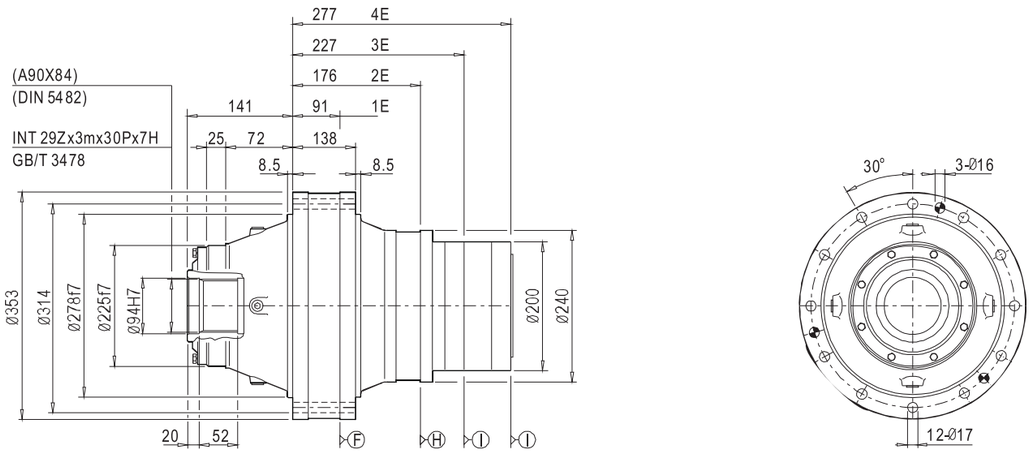

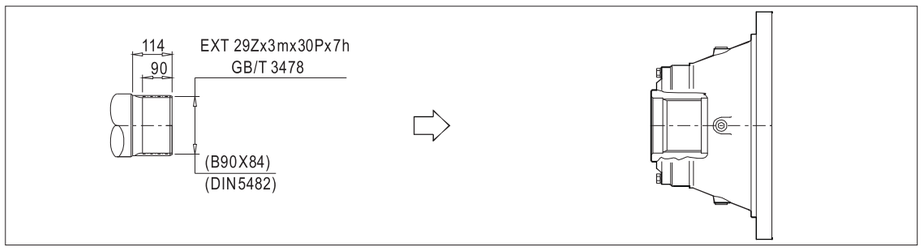

354C2H

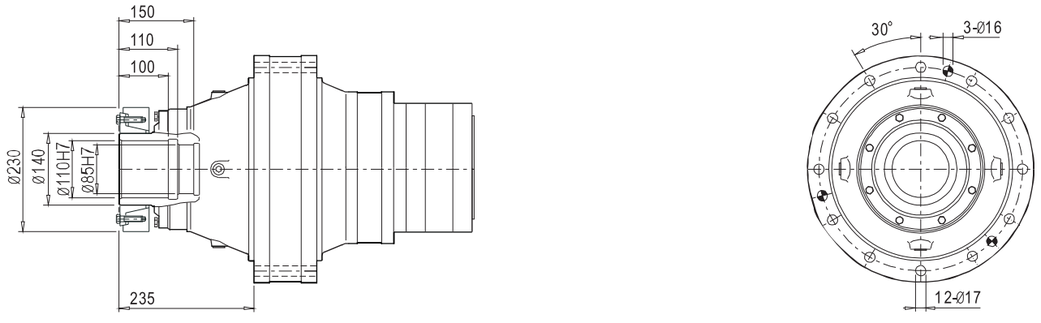

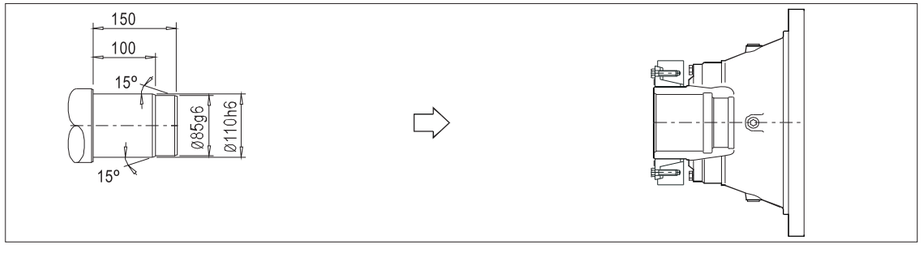

354C2C

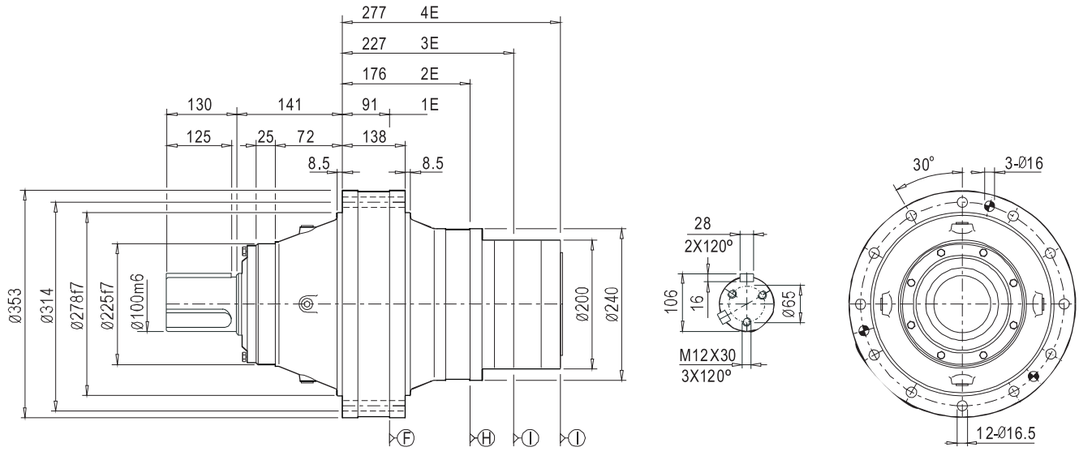

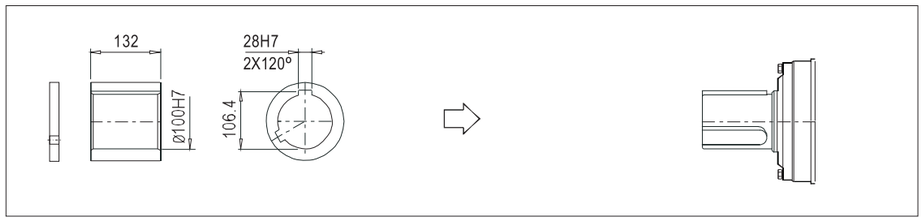

354C2S

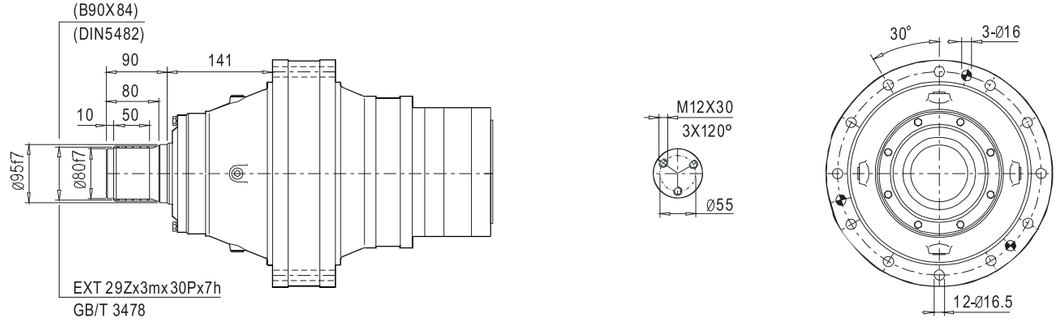

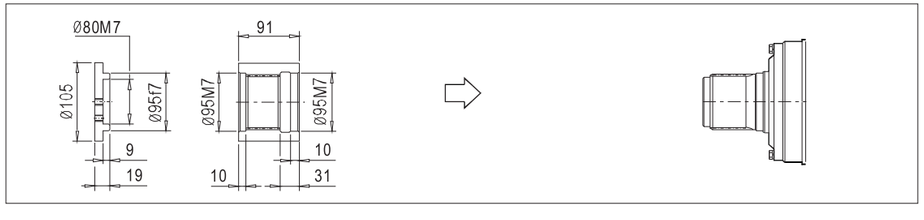

354R2C(S)

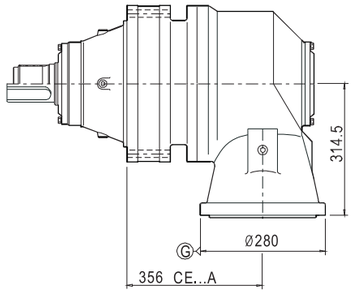

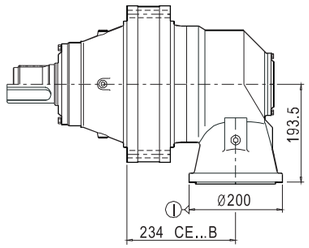

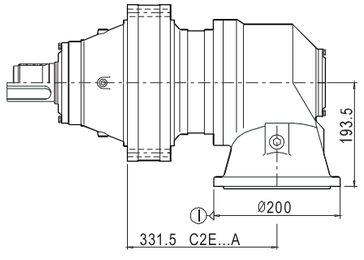

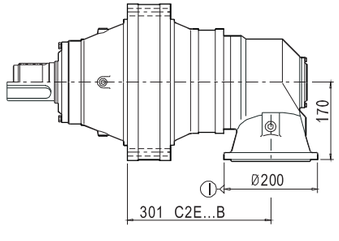

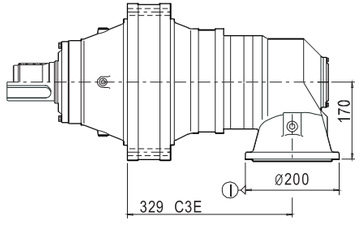

354R2Z(H)

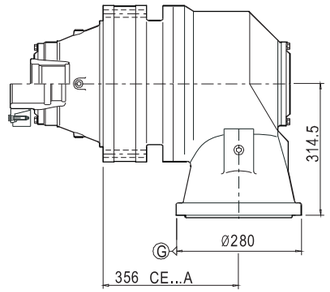

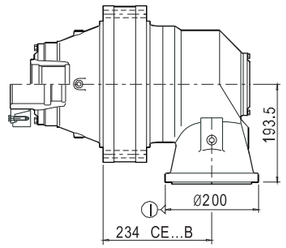

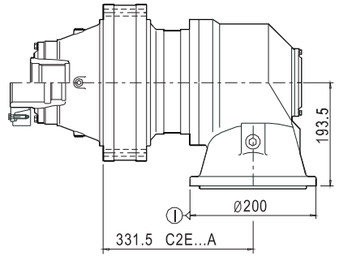

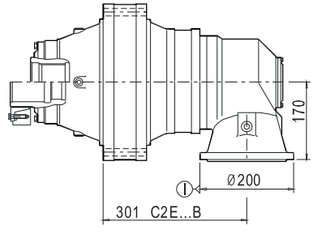

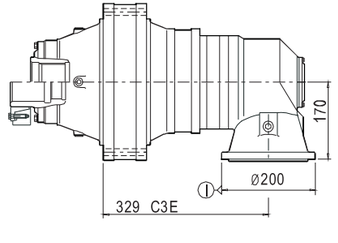

CHBNS 传承之道 稳行致远
THE WAY OF INHERITANCE IS STEADY AND FAR-REACHING
传动装置专业制造商
PROFESSIONAL MANUFACTURER OF TRANSMISSION DEVICE
N series 系列

355	i	T2 [N.m] n2xh [r/minxh] 10000	25000	50000	100000	500000	1000000	2000000	n1 [r/min]	n1max [r/min]	T2max [N.m]	Pt [kW]
1E	3.18	20530	17740	15880	15080	13560	12940	12360	1200	1500	38200	42
	3.85	20760	17990	16100	15030	13550	12950	12380	1500	2000	40060	42
	4.36	19590	16970	15230	14130	12870	12320	11770	1500	2000	38570	42
	5.11	15980	13840	12430	11880	10730	10250	9810	1500	2000	32400	42
	6.29	11890	10320	9470	9050	8180	7830	7490	1500	2000	25060	42
2E	13.45	20530	17740	15880	15080	13560	12940	12360	1200	1500	38200	25
	16.29	20760	17990	16100	15030	13550	12950	12380	1200	1500	40060	25
	19.62	19590	16970	15230	14130	12870	12320	11770	1500	2000	38570	25
	22.67	19590	16970	15230	14130	12870	12320	11770	1500	2000	38570	25
	26.57	15980	13840	12430	11880	10730	10250	9810	1500	2000	32400	25
	31.99	15980	13840	12430	11880	10730	10250	9810	1500	2000	32400	25
	39.38	11890	10320	9470	9050	8180	7830	7490	1500	2000	25060	25
	44.34	11890	10320	9470	9050	8180	7830	7490	1500	2000	25060	25
3E	43.52	20530	17740	15880	15080	13560	12940	12360	1500	2000	38200	17
	47.65	20530	17740	15880	15080	13560	12940	12360	1500	2000	38200	17
	57.69	20760	17990	16100	15030	13550	12950	12380	1500	2000	40060	17
	73.28	20760	17990	16100	15030	13550	12950	12380	1500	2000	40060	17
	81.43	20760	17990	16100	15030	13550	12950	12380	1500	2000	40060	17
	101.78	20760	17990	16100	15030	13550	12950	12380	1500	2000	40060	17
	122.63	19590	16970	15230	14130	12870	12320	11770	1500	2000	38570	17
	158.70	19590	16970	15230	14130	12870	12320	11770	1500	2000	38570	17
	181.38	19590	16970	15230	14130	12870	12320	11770	1500	2000	38570	17
	213.12	19590	16970	15230	14130	12870	12320	11770	1500	2000	38570	17
	249.78	15980	13840	12430	11880	10730	10250	9810	1500	2000	32400	17
	300.69	15980	13840	12430	11880	10730	10250	9810	1500	2000	32400	17
4E	240.24	20760	17990	16100	15030	13550	12950	12380	2000	2500	40060	14
	307.49	20760	17990	16100	15030	13550	12950	12380	2000	2500	40060	14
	379.51	20760	17990	16100	15030	13550	12950	12380	2000	2500	40060	14
	415.52	20760	17990	16100	15030	13550	12950	12380	2000	2500	40060	14
	508.92	20760	17990	16100	15030	13550	12950	12380	2000	2500	40060	14
	618.03	19590	16970	15230	14130	12870	12320	11770	2000	2500	38570	14
	706.32	19590	16970	15230	14130	12870	12320	11770	2000	2500	38570	14
	899.85	19590	16970	15230	14130	12870	12320	11770	2000	2500	38570	14
	1028.40	19590	16970	15230	14130	12870	12320	11770	2000	2500	38570	14
	1277.50	15980	13840	12430	11880	10730	10250	9810	2000	2500	32400	14
	1665.99	15980	13840	12430	11880	10730	10250	9810	2000	2500	32400	14
	1836.41	15980	13840	12430	11880	10730	10250	9810	2000	2500	32400	14
	2056.78	15980	13840	12430	11880	10730	10250	9810	2000	2500	32400	14
	2531.73	11890	10320	9470	9050	8180	7830	7490	2000	2500	25060	14

355	i	T_2 [N.m] n2xh [r/minxh] 10000	25000	50000	100000	500000	1000000	2000000	n_1 [r/min]	n_{1max} [r/min]	T_{2max} [N.m]	P_t [kW]
CE	8.00	20760	17990	16100	15030	13550	12950	12380	1500	2000	40060	50
	9.06	19590	16970	15230	14130	12870	12320	11770	1500	2000	38570	50
	12.26	19590	16970	15230	14130	12870	12320	11770	1500	2000	38570	50
	14.37	15980	13840	12430	11880	10730	10250	9810	1500	2000	32400	50
	17.69	11890	10320	9470	9050	8180	7830	7490	1500	2000	25060	50
	20.44	15980	13840	12430	11880	10730	10250	9810	1500	2000	32400	50
	25.16	11890	10320	9470	9050	8180	7830	7490	1500	2000	25060	50
	36.17	11890	10320	9470	9050	8180	7830	7490	1500	2000	25060	50
C2E	38.28	20530	17740	15880	15080	13560	12940	12360	1500	2000	38200	20
	46.35	20760	17990	16100	15030	13550	12950	12380	1500	2000	40060	20
	55.84	19590	16970	15230	14130	12870	12320	11770	1500	2000	38570	20
	64.53	19590	16970	15230	14130	12870	12320	11770	1500	2000	38570	20
	75.63	15980	13840	12430	11880	10730	10250	9810	1500	2000	32400	20
	80.12	19590	16970	15230	14130	12870	12320	11770	1500	2000	38570	20
	92.58	19590	16970	15230	14130	12870	12320	11770	1500	2000	38570	20
	108.50	15980	13840	12430	11880	10730	10250	9810	1500	2000	32400	20
	130.62	15980	13840	12430	11880	10730	10250	9810	1500	2000	32400	20
	181.07	11890	10320	9470	9050	8180	7830	7490	1500	2000	25060	20
	231.88	11890	10320	9470	9050	8180	7830	7490	1500	2000	25060	20
	261.14	11890	10320	9470	9050	8180	7830	7490	1500	2000	25060	20
C3E	339.81	20760	17990	16100	15030	13550	12950	12380	1500	2000	40060	15
	431.65	20760	17990	16100	15030	13550	12950	12380	1500	2000	40060	15
	479.61	20760	17990	16100	15030	13550	12950	12380	1500	2000	40060	15
	599.51	20760	17990	16100	15030	13550	12950	12380	1500	2000	40060	15
	722.26	19590	16970	15230	14130	12870	12320	11770	1500	2000	38570	15
	874.22	15980	13840	12430	11880	10730	10250	9810	1500	2000	32400	15
	1068.30	19590	16970	15230	14130	12870	12320	11770	1500	2000	38570	15
	1255.26	19590	16970	15230	14130	12870	12320	11770	1500	2000	38570	15
	1471.19	15980	13840	12430	11880	10730	10250	9810	1500	2000	32400	15
	1771.08	15980	13840	12430	11880	10730	10250	9810	1500	2000	32400	15

CHBNS 传承之道 稳行致远
THE WAY OF INHERITANCE IS STEADY AND FAR-REACHING
传动装置专业制造商
PROFESSIONAL MANUFACTURER OF TRANSMISSION DEVICE
N series 系列

355C2Z

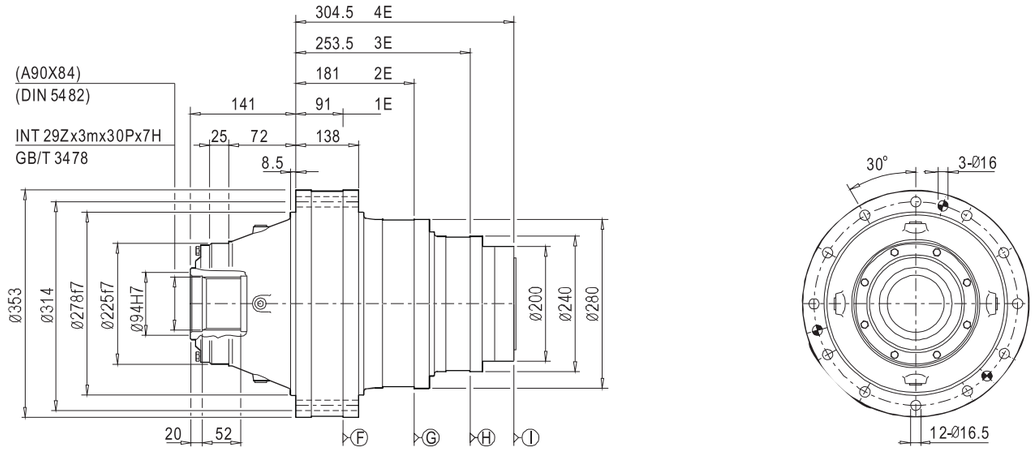

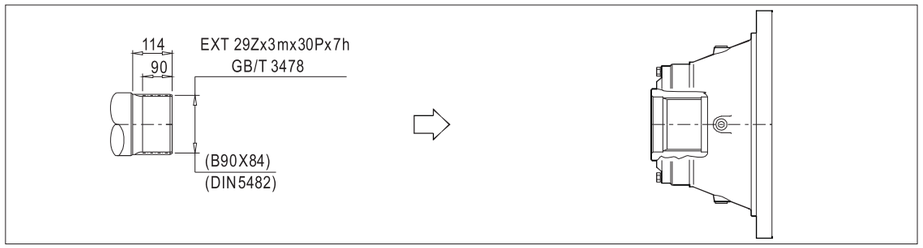

355C2H

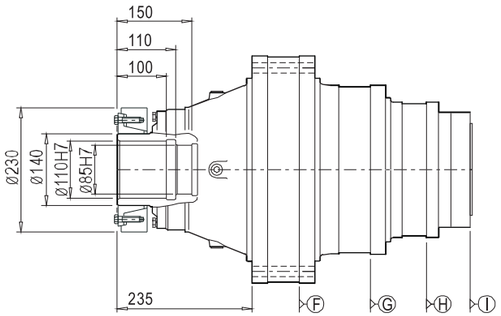

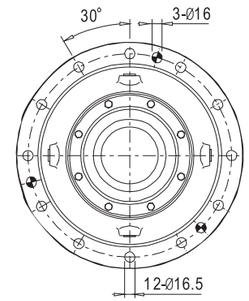

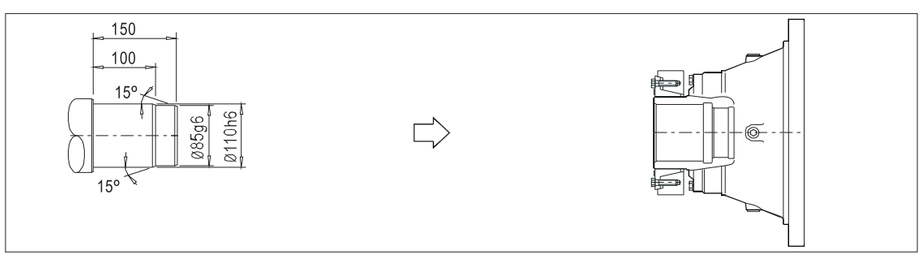

355C2C

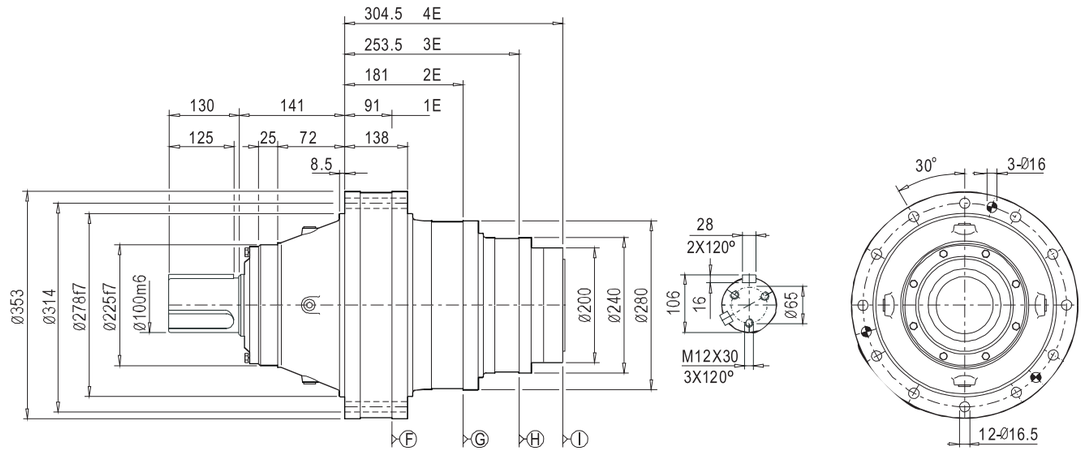

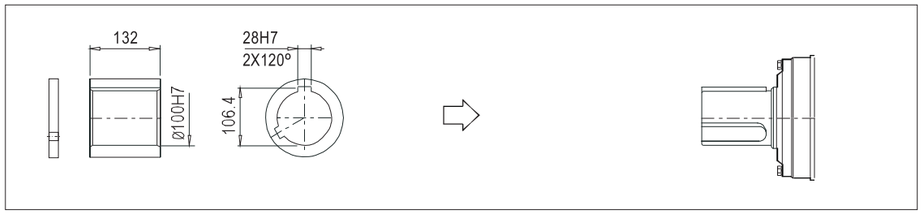

355C2S

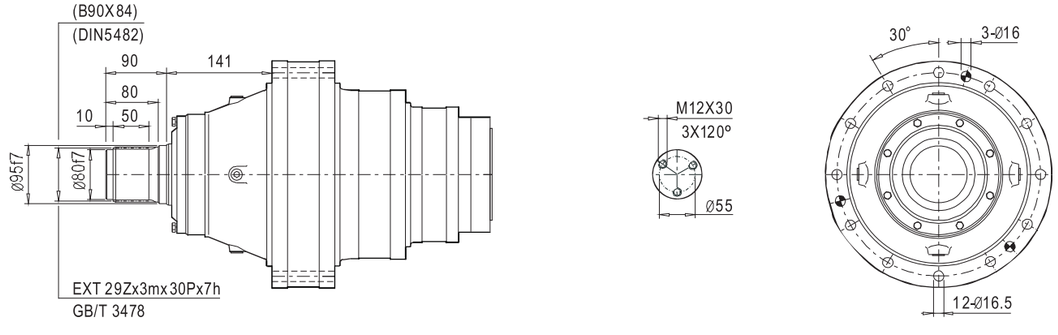

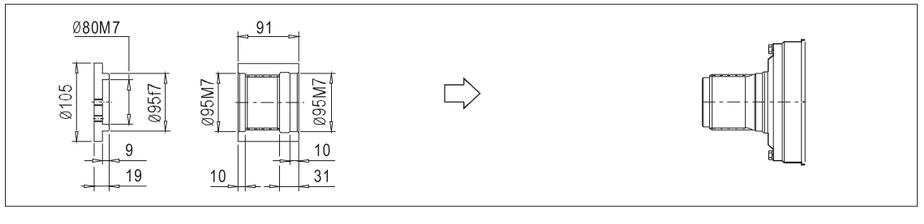

355R2C(S)

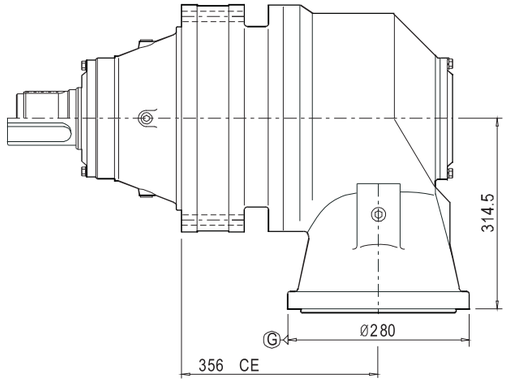

355R2Z(H)

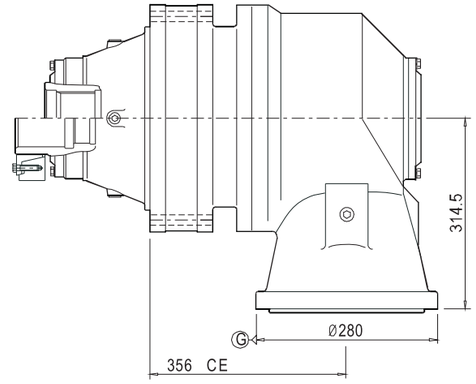

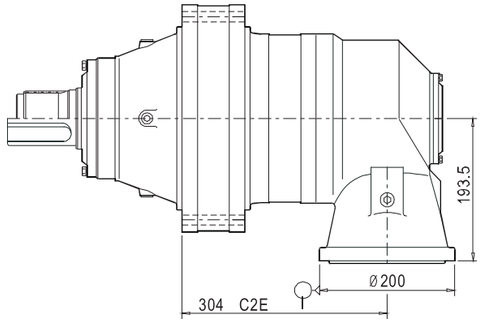

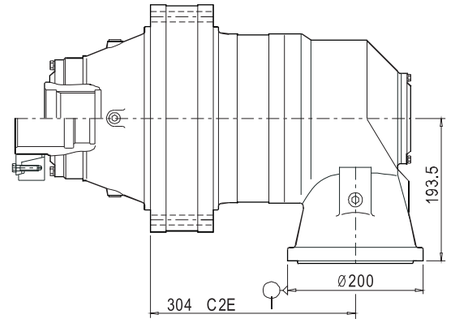

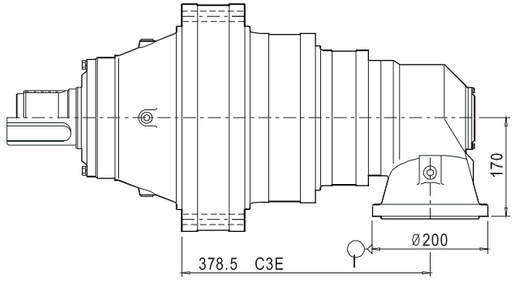

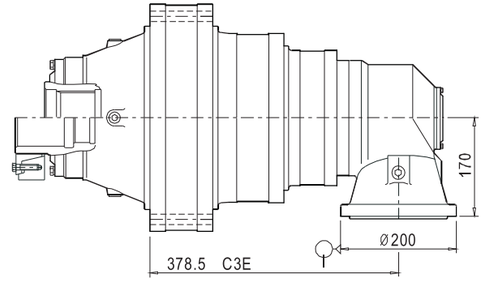

400	i	T2 [N.m] n2xh [r/minxh] 10000	25000	50000	100000	500000	1000000	2000000	n1 [r/min]	n1max [r/min]	T2max [N.m]	Pt [kW]
1E	3.86	32350	27990	25090	23390	21070	20140	19250	1500	2000	55770	54
	4.33	29060	25170	22560	21420	19320	18460	17660	1500	2000	58650	54
	5	26150	22680	20350	19380	17500	16740	16010	1500	2000	52920	54
	6	20770	18020	16460	15740	14220	13600	13010	1500	2000	43390	54
2E	16.33	32350	27990	25090	23390	21070	20140	19250	1000	1500	55770	29
	18.32	29060	25170	22560	21420	19320	18460	17660	1000	1500	58650	29
	21.15	26150	22680	20350	19380	17500	16740	16010	1000	1500	52920	29
	27.00	20770	18020	16460	15740	14220	13600	13010	1500	2000	43390	29
	31.20	20770	18020	16460	15740	14220	13600	13010	1500	2000	43390	29
	37.56	20770	18020	16460	15740	14220	13600	13010	1500	2000	43390	29
3E	52.83	32350	27990	25090	23390	21070	20140	19250	1500	2000	55770	22
	59.26	29060	25170	22560	21420	19320	18460	17660	1500	2000	58650	22
	75.28	29060	25170	22560	21420	19320	18460	17660	1500	2000	58650	22
	82.42	29060	25170	22560	21420	19320	18460	17660	1500	2000	58650	22
	91.58	29060	25170	22560	21420	19320	18460	17660	1500	2000	58650	22
	114.47	29060	25170	22560	21420	19320	18460	17660	1500	2000	58650	22
	157.50	26150	22680	20350	19380	17500	16740	16010	1500	2000	52920	22
	180.00	26150	22680	20350	19380	17500	16740	16010	1500	2000	52920	22
	212.97	20770	18020	16460	15740	14220	13600	13010	1500	2000	43390	22
	234.75	20770	18020	16460	15740	14220	13600	13010	1500	2000	43390	22
	300.48	20770	18020	16460	15740	14220	13600	13010	1500	2000	43390	22
	353.06	20770	18020	16460	15740	14220	13600	13010	1500	2000	43390	22
4E	213.43	32350	27990	25090	23390	21070	20140	19250	2000	2500	55770	17
	261.50	32350	27990	25090	23390	21070	20140	19250	2000	2500	55770	17
	299.54	32350	27990	25090	23390	21070	20140	19250	2000	2500	55770	17
	372.63	29060	25170	22560	21420	19320	18460	17660	2000	2500	58650	17
	426.83	29060	25170	22560	21420	19320	18460	17660	2000	2500	58650	17
	519.26	29060	25170	22560	21420	19320	18460	17660	2000	2500	58650	17
	641.06	29060	25170	22560	21420	19320	18460	17660	2000	2500	58650	17
	715.46	29060	25170	22560	21420	19320	18460	17660	2000	2500	58650	17
	801.32	29060	25170	22560	21420	19320	18460	17660	2000	2500	58650	17
	1020.60	26150	22680	20350	19380	17500	16740	16010	2000	2500	52920	17
	1502.40	20770	18020	16460	15740	14220	13600	13010	2000	2500	43390	17
	1490.76	20770	18020	16460	15740	14220	13600	13010	2000	2500	43390	17
	1878.00	20770	18020	16460	15740	14220	13600	13010	2000	2500	43390	17
	2159.70	20770	18020	16460	15740	14220	13600	13010	2000	2500	43390	17
	2449.10	20770	18020	16460	15740	14220	13600	13010	2000	2500	43390	17

CHBNS 传承之道 稳行致远
THE WAY OF INHERITANCE IS STEADY AND FAR-REACHING
传动装置专业制造商
PROFESSIONAL MANUFACTURER OF TRANSMISSION DEVICE
N series 系列

400	i	T2 [N.m] n2xh [r/minxh] 10000	25000	50000	100000	500000	1000000	2000000	n1 [r/min]	n1max [r/min]	T2max [N.m]	Pt [kW]
CE	10.38	26150	22680	20350	19380	17500	16740	16010	1500	2000	52920	55
	12.46	20770	18020	16460	15740	14220	13600	13010	1500	2000	43390	55
	16.88	20770	18020	16460	15740	14220	13600	13010	1500	2000	43390	55
	24.00	19110	16580	15150	14490	13090	12520	11970	1500	2000	39920	55
C2E	52.13	29060	25170	22560	21420	19320	18460	17660	1500	2000	58650	22
	60.20	26150	22680	20350	19380	17500	16740	16010	1500	2000	52920	22
	76.85	20770	18020	16460	15740	14220	13600	13010	1500	2000	43390	22
	88.80	20770	18020	16460	15740	14220	13600	13010	1500	2000	43390	22
	106.90	20770	18020	16460	15740	14220	13600	13010	1500	2000	43390	22
	127.40	20770	18020	16460	15740	14220	13600	13010	1500	2000	43390	22
	153.37	20770	18020	16460	15740	14220	13600	13010	1500	2000	43390	22
	183.73	20770	18020	16460	15740	14220	13600	13010	1500	2000	43390	22
	221.19	20770	18020	16460	15740	14220	13600	13010	1500	2000	43390	22
C3E	207.42	29060	25170	22560	21420	19320	18460	17660	1500	2000	58650	15
	263.47	29060	25170	22560	21420	19320	18460	17660	1500	2000	58650	15
	288.48	29060	25170	22560	21420	19320	18460	17660	1500	2000	58650	15
	320.53	29060	25170	22560	21420	19320	18460	17660	1500	2000	58650	15
	400.66	29060	25170	22560	21420	19320	18460	17660	1500	2000	58650	15
	486.00	26150	22680	20350	19380	17500	16740	16010	1500	2000	52920	15
	575.01	26150	22680	20350	19380	17500	16740	16010	1500	2000	52920	15
	674.25	29060	25170	22560	21420	19320	18460	17660	1500	2000	58650	15
	872.01	26150	22680	20350	19380	17500	16740	16010	1500	2000	52920	15
	1060.20	26150	22680	20350	19380	17500	16740	16010	1500	2000	52920	15
	1254.37	20770	18020	16460	15740	14220	13600	13010	1500	2000	43390	15
	1382.68	20770	18020	16460	15740	14220	13600	13010	1500	2000	43390	15
	1769.83	20770	18020	16460	15740	14220	13600	13010	1500	2000	43390	15
	2079.55	20770	18020	16460	15740	14220	13600	13010	1500	2000	43390	15

400C2Z

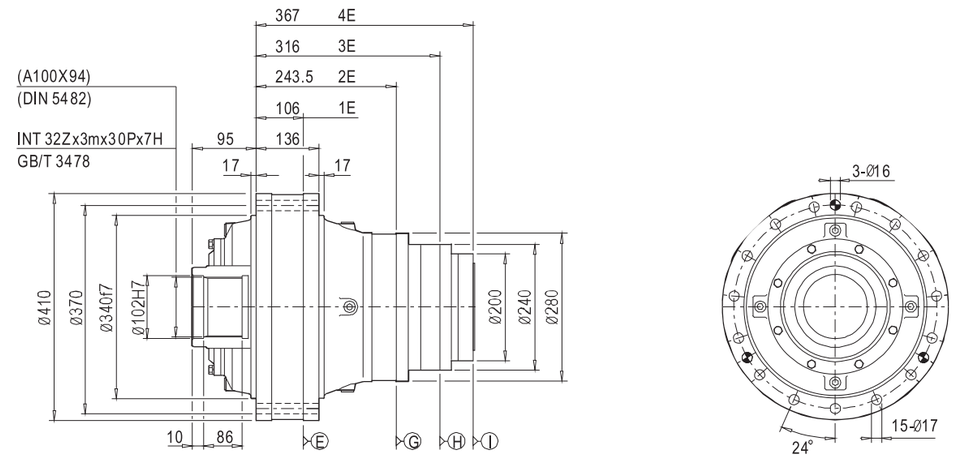

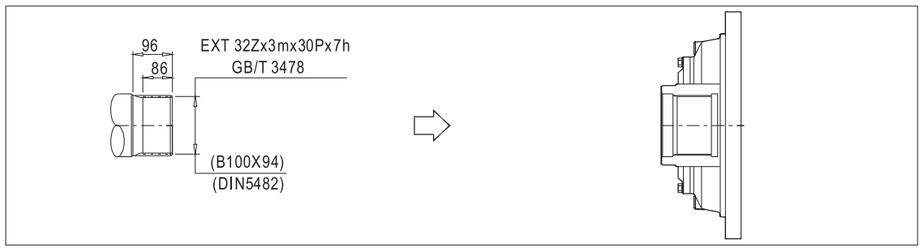

400C2H

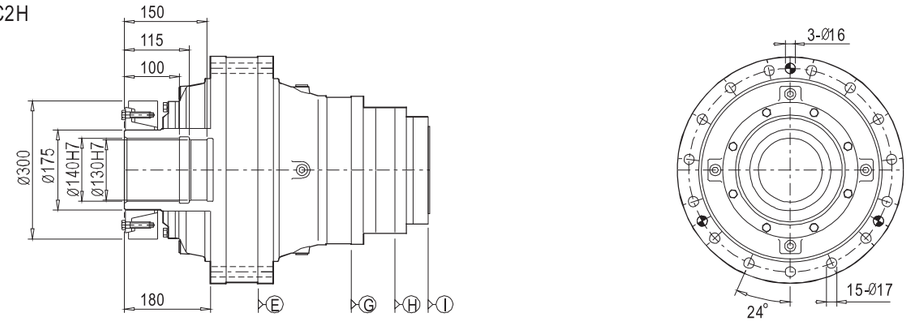

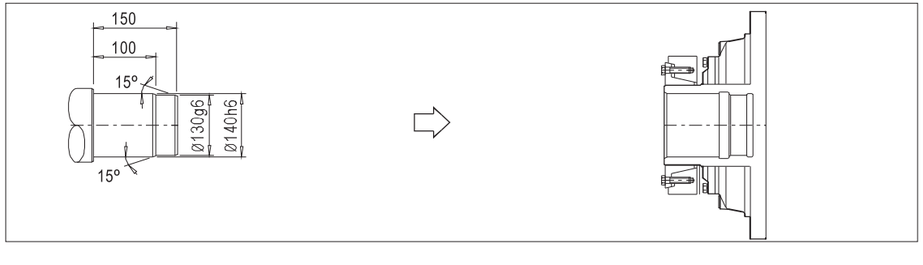

CHBNS 传承之道 稳行致远
THE WAY OF INHERITANCE IS STEADY AND FAR-REACHING
传动装置专业制造商
PROFESSIONAL MANUFACTURER OF TRANSMISSION DEVICE
N series 系列

400C2C

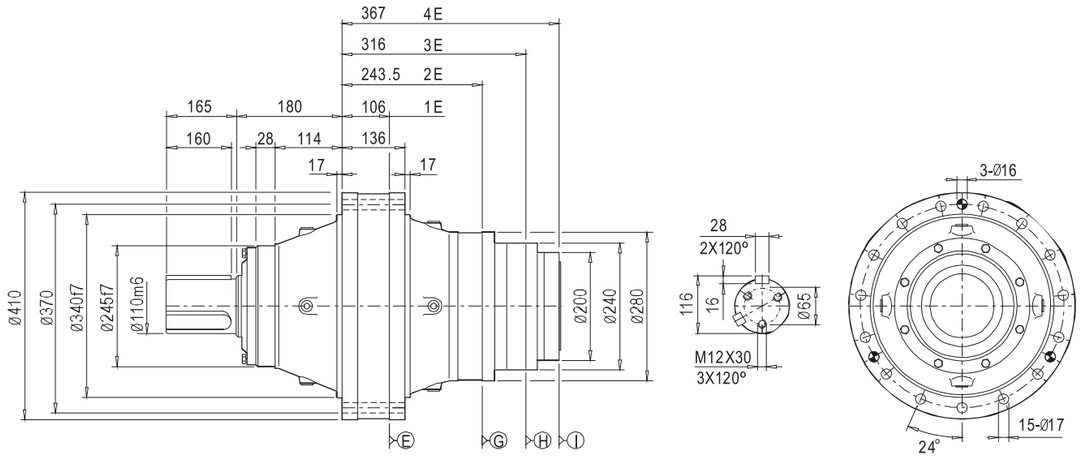

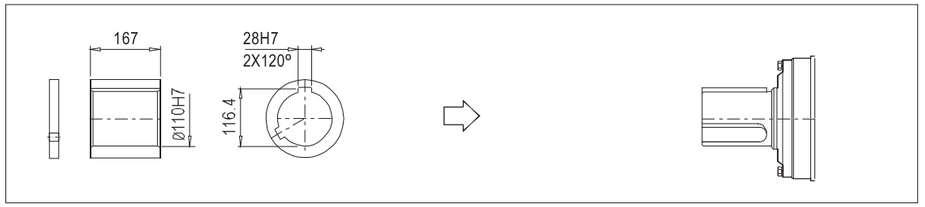

400C2S

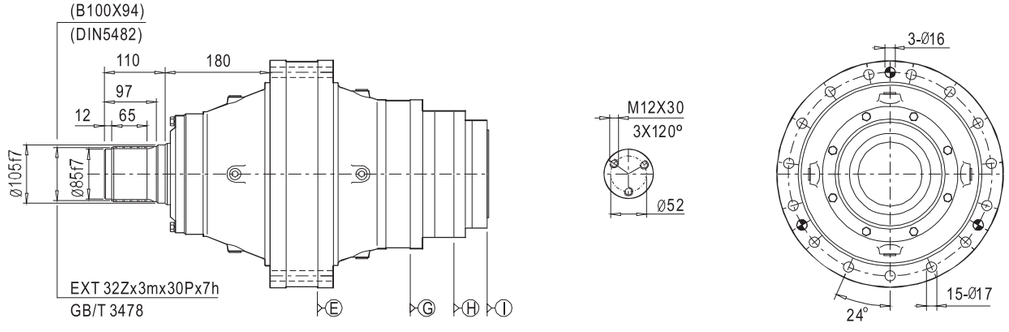

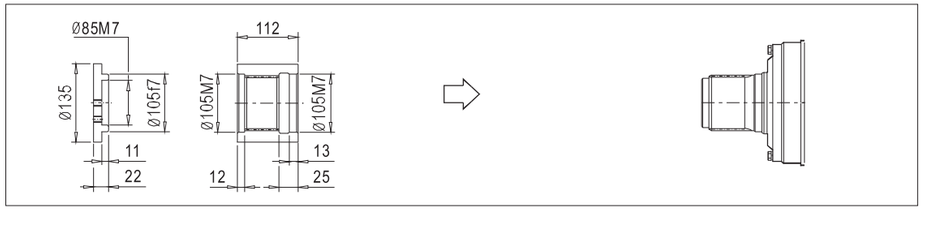

400R2Z(H)

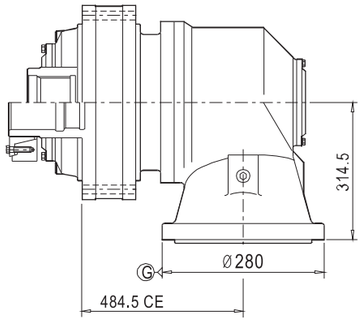

400R2C(S)

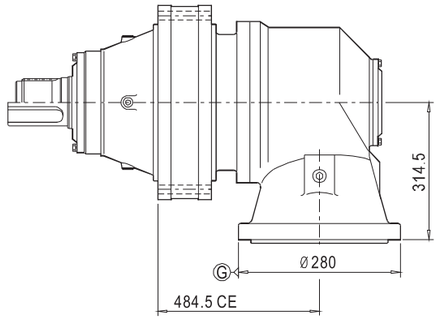

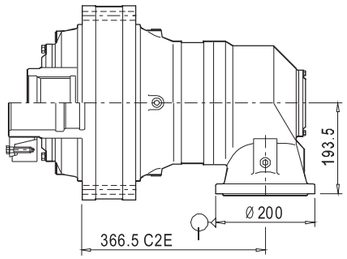

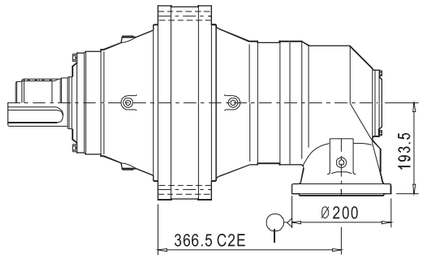

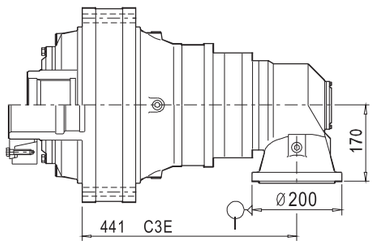

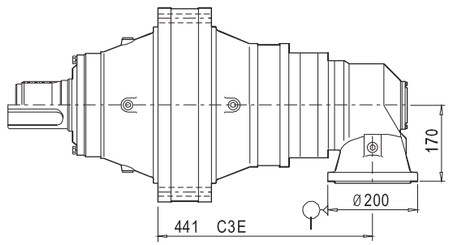

CHBNS 传承之道 稳行致远
THE WAY OF INHERITANCE IS STEADY AND FAR-REACHING
传动装置专业制造商
PROFESSIONAL MANUFACTURER OF TRANSMISSION DEVICE
N series 系列

401	i	T_2 [N.m]							n_1	n_{1max}	T_{2max}	P_t
		n_{2xh} [r/minxh]										
		10000	25000	50000	100000	500000	1000000	2000000	[r/min]	[r/min]	[N.m]	[kW]
2E	15.29	32350	27990	25090	23390	21070	20140	19250	1500	2000	55770	35
	18.88	29060	25170	22560	21420	19320	18460	17660	1500	2000	58650	35
	21.17	29060	25170	22560	21420	19320	18460	17660	1500	2000	58650	35
	24.55	29060	25170	22560	21420	19320	18460	17660	1500	2000	58650	35
	31.25	26150	22680	20350	19380	17500	16740	16010	1500	2000	52920	35
	35.00	26150	22680	20350	19380	17500	16740	16010	1500	2000	52920	35
	42.00	20770	18020	16460	15740	14220	13600	13010	1500	2000	43390	35
3E	50.45	32350	27990	25090	23390	21070	20140	19250	1500	2000	55770	26
	61.37	32350	27990	25090	23390	21070	20140	19250	1500	2000	55770	26
	70.25	32350	27990	25090	23390	21070	20140	19250	1500	2000	55770	26
	86.36	32350	27990	25090	23390	21070	20140	19250	1500	2000	55770	26
	95.09	32350	27990	25090	23390	21070	20140	19250	1500	2000	55770	26
	118.18	29060	25170	22560	21420	19320	18460	17660	1500	2000	58650	26
	153.69	29060	25170	22560	21420	19320	18460	17660	1500	2000	58650	26
	173.09	29060	25170	22560	21420	19320	18460	17660	1500	2000	58650	26
	219.75	29060	25170	22560	21420	19320	18460	17660	1500	2000	58650	26
	253.75	26150	22680	20350	19380	17500	16740	16010	1500	2000	52920	26
	304.50	20770	18020	16460	15740	14220	13600	13010	1500	2000	43390	26
4E	207.35	32350	27990	25090	23390	21070	20140	19250	1500	2000	55770	20
	252.25	32350	27990	25090	23390	21070	20140	19250	1500	2000	55770	20
	286.05	32350	27990	25090	23390	21070	20140	19250	1500	2000	55770	20
	353.15	32350	27990	25090	23390	21070	20140	19250	1500	2000	55770	20
	439.08	32350	27990	25090	23390	21070	20140	19250	1500	2000	55770	20
	491.76	32350	27990	25090	23390	21070	20140	19250	1500	2000	55770	20
	604.55	32350	27990	25090	23390	21070	20140	19250	1500	2000	55770	20
	690.91	32350	27990	25090	23390	21070	20140	19250	1500	2000	55770	20
	811.82	32350	27990	25090	23390	21070	20140	19250	1500	2000	55770	20
	1075.83	29060	25170	22560	21420	19320	18460	17660	1500	2000	58650	20
	1229.52	29060	25170	22560	21420	19320	18460	17660	1500	2000	58650	20
	1444.68	29060	25170	22560	21420	19320	18460	17660	1500	2000	58650	20

401	i	T_2 [N.m] n2xh [r/minxh] 10000	25000	50000	100000	500000	1000000	2000000	n_1 [r/min]	n_{1max} [r/min]	T_{2max} [N.m]	P_t [kW]
C2E	25.49	32350	27990	25090	23390	21070	20140	19250	1500	2000	55770	
	31.75	32350	27990	25090	23390	21070	20140	19250	1500	2000	55770	
	34.52	32350	27990	25090	23390	21070	20140	19250	1500	2000	55770	
	42.99	32350	27990	25090	23390	21070	20140	19250	1500	2000	55770	
	49.10	32350	27990	25090	23390	21070	20140	19250	1500	2000	55770	
	61.14	32350	27990	25090	23390	21070	20140	19250	1500	2000	55770	
	75.52	29060	25170	22560	21420	19320	18460	17660	1500	2000	58650	
	84.69	29060	25170	22560	21420	19320	18460	17660	1500	2000	58650	
	98.20	29060	25170	22560	21420	19320	18460	17660	1500	2000	58650	
	125.00	26150	22680	20350	19380	17500	16740	16010	1500	2000	52920	
	141.17	29060	25170	22560	21420	19320	18460	17660	1500	2000	58650	
	179.69	26150	22680	20350	19380	17500	16740	16010	1500	2000	52920	
	201.25	26150	22680	20350	19380	17500	16740	16010	1500	2000	52920	
	241.5	20770	18020	16460	15740	14220	13600	13010	1500	2000	43390	
C3E	143.59	32350	27990	25090	23390	21070	20140	19250	1500	2000	55770	
	174.68	32350	27990	25090	23390	21070	20140	19250	1500	2000	55770	
	199.95	32350	27990	25090	23390	21070	20140	19250	1500	2000	55770	
	245.80	32350	27990	25090	23390	21070	20140	19250	1500	2000	55770	
	286.86	32350	27990	25090	23390	21070	20140	19250	1500	2000	55770	
	352.65	32350	27990	25090	23390	21070	20140	19250	1500	2000	55770	
	413.71	32350	27990	25090	23390	21070	20140	19250	1500	2000	55770	
	508.59	32350	27990	25090	23390	21070	20140	19250	1500	2000	55770	
	559.96	32350	27990	25090	23390	21070	20140	19250	1500	2000	55770	
	695.96	29060	25170	22560	21420	19320	18460	17660	1500	2000	58650	
	905.06	29060	25170	22560	21420	19320	18460	17660	1500	2000	58650	
	1019.28	29060	25170	22560	21420	19320	18460	17660	1500	2000	58650	
	1294.07	29060	25170	22560	21420	19320	18460	17660	1500	2000	58650	
	1494.31	26150	22680	20350	19380	17500	16740	16010	1500	2000	52920	
	1793.17	20770	18020	16460	15740	14220	13600	13010	1500	2000	43390	
C4E	882.86	29060	25170	22560	21420	19320	18460	17660	1500	2000	58650	
	1001.17	32350	27990	25090	23390	21070	20140	19250	1500	2000	55770	
	1236.01	32350	27990	25090	23390	21070	20140	19250	1500	2000	55770	
	1536.76	32350	27990	25090	23390	21070	20140	19250	1500	2000	55770	
	1721.17	32350	27990	25090	23390	21070	20140	19250	1500	2000	55770	
	2115.91	32350	27990	25090	23390	21070	20140	19250	1500	2000	55770	
	2418.18	32350	27990	25090	23390	21070	20140	19250	1500	2000	55770	
	2841.36	32350	27990	25090	23390	21070	20140	19250	1500	2000	55770	
	3560.77	32350	27990	25090	23390	21070	20140	19250	1500	2000	55770	
	4069.45	32350	27990	25090	23390	21070	20140	19250	1500	2000	55770	
	4781.61	32350	27990	25090	23390	21070	20140	19250	1500	2000	55770	
	6336.63	29060	25170	22560	21420	19320	18460	17660	1500	2000	58650	
	7241.87	29060	25170	22560	21420	19320	18460	17660	1500	2000	58650	
	8509.19	29060	25170	22560	21420	19320	18460	17660	1500	2000	58650	

CHBNS 传承之道 稳行致远
THE WAY OF INHERITANCE IS STEADY AND FAR-REACHING
传动装置专业制造商
PROFESSIONAL MANUFACTURER OF TRANSMISSION DEVICE
N series 系列

401C2Z

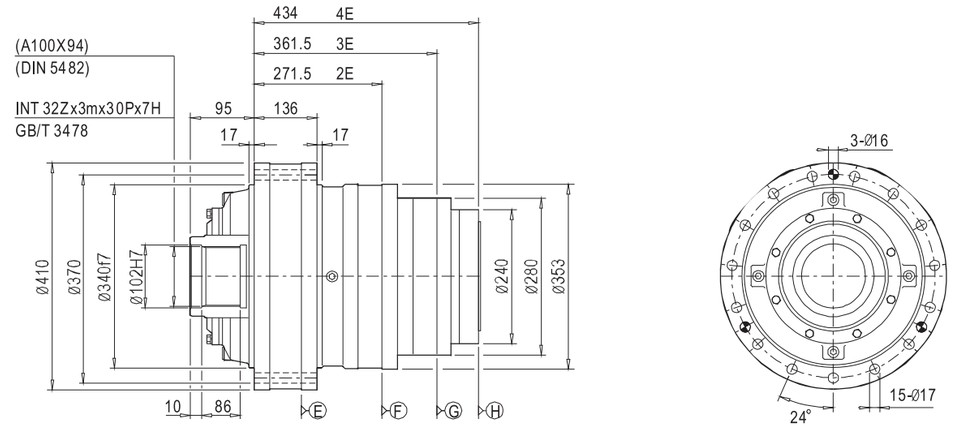

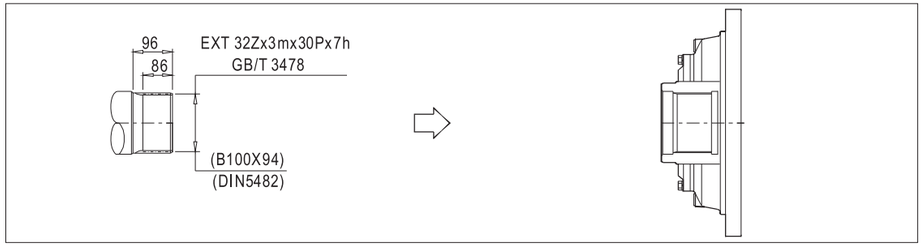

401C2H

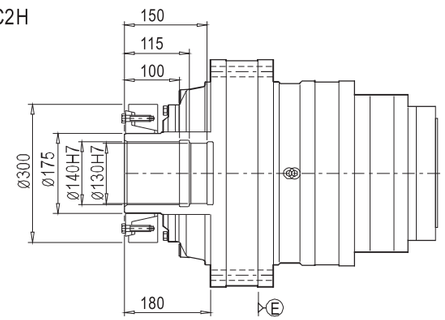

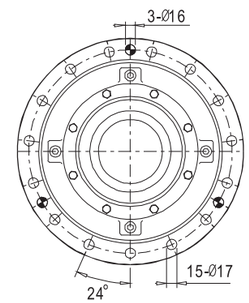

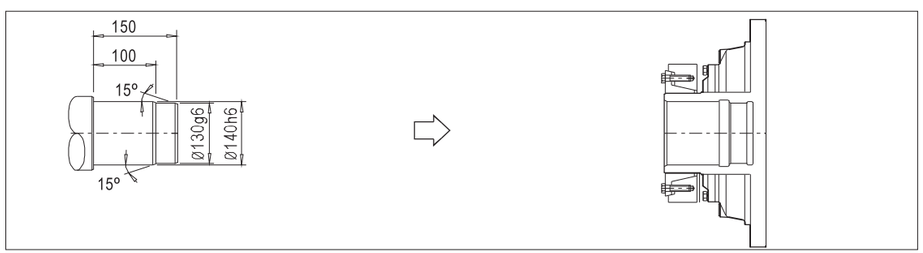

401C2C

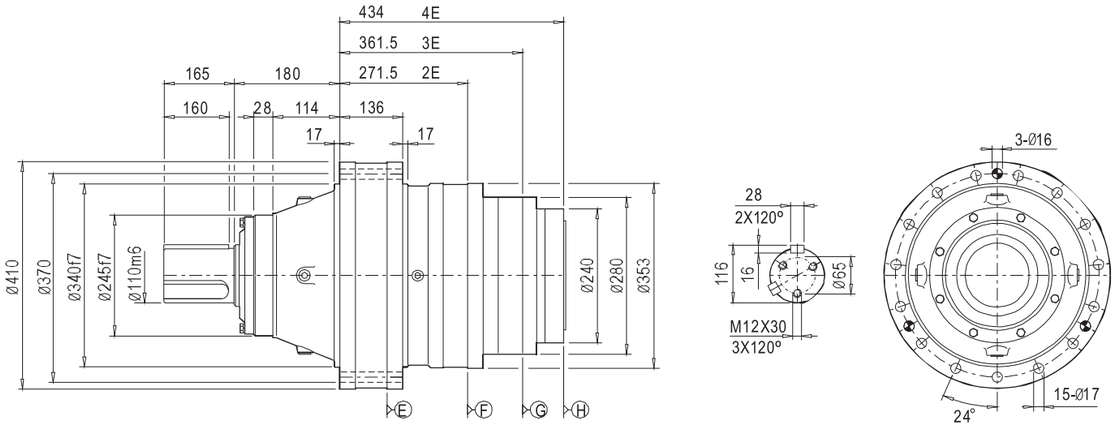

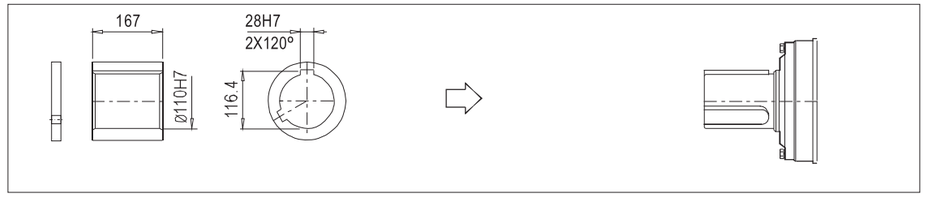

401C2S

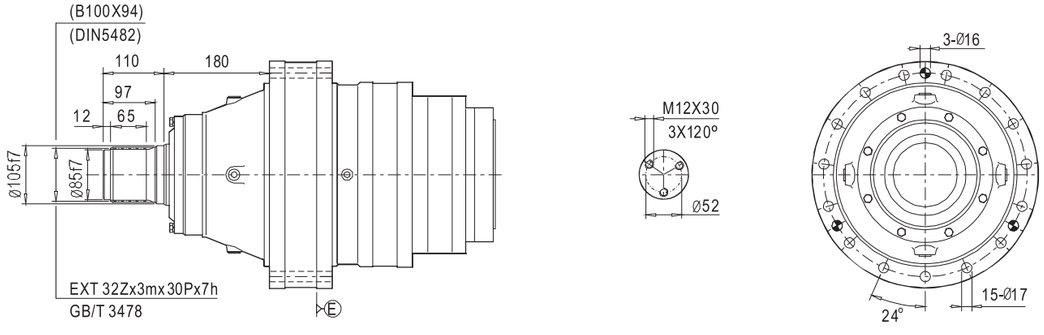

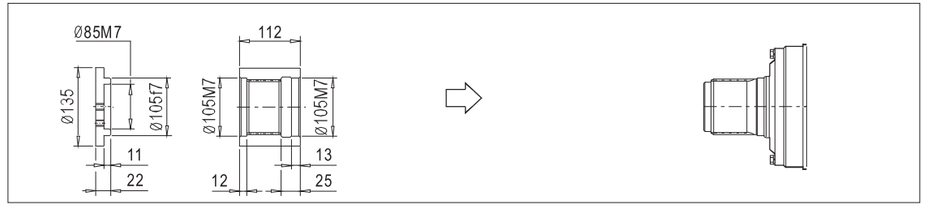

CHBNS 传承之道 稳行致远
THE WAY OF INHERITANCE IS STEADY AND FAR-REACHING
传动装置专业制造商
PROFESSIONAL MANUFACTURER OF TRANSMISSION DEVICE
N series 系列

401R2Z(H)

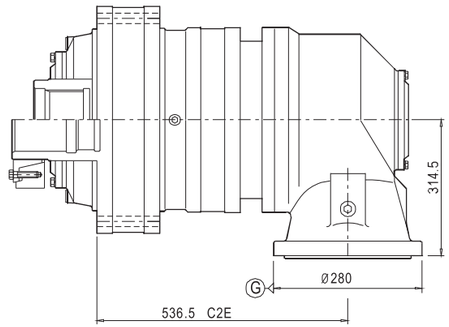

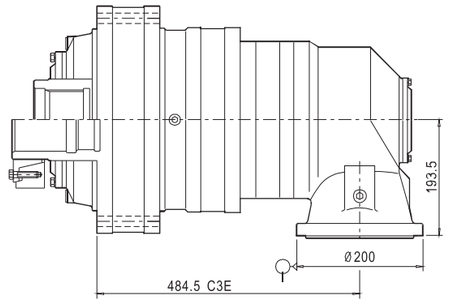

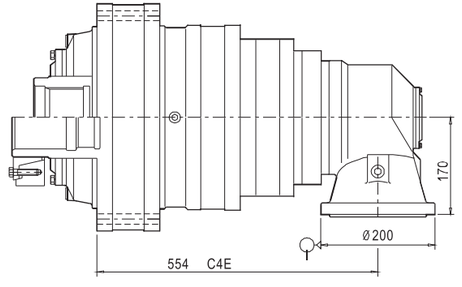

401R2C(S)

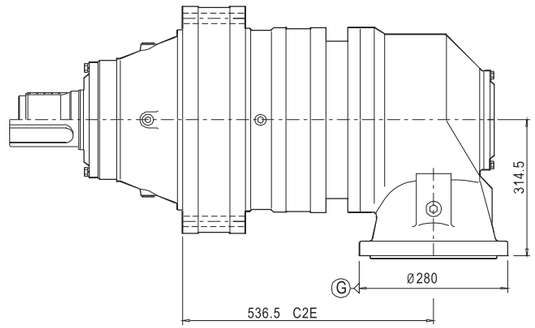

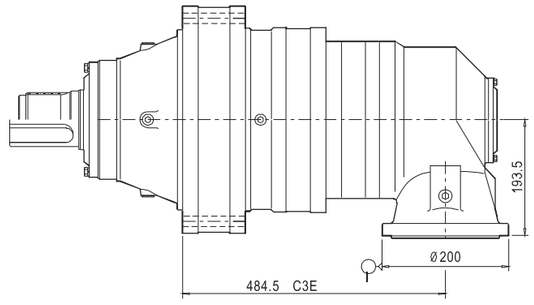

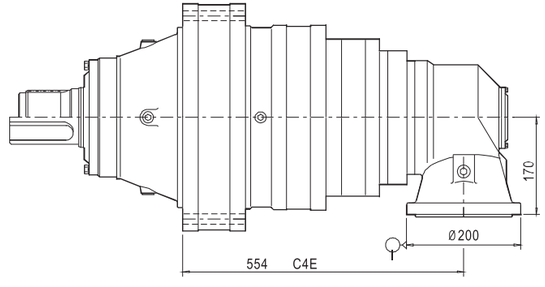

428	i	T2 [N.m] n2xh [r/minxh] 10000	25000	50000	100000	500000	1000000	2000000	n1 [r/min]	n1max [r/min]	T2max [N.m]	Pt [kW]
2E	17.32	34600	30000	26930	25780	23260	22250	21290	1200	1500	70540	32
	22.00	34600	30000	26930	25780	23260	22250	21290	1200	1500	70540	32
	28.13	26020	22550	20660	19790	17870	17100	16340	1500	2000	54730	32
	32.50	26020	22550	20660	19790	17870	17100	16340	1500	2000	54730	32
	39.13	21080	18270	16740	16030	14480	13860	13240	1500	2000	44340	32
3E	57.66	34600	30000	26930	25780	23260	22250	21290	1200	1500	70540	24
	61.47	34600	30000	26930	25780	23260	22250	21290	1200	1500	70540	24
	71.17	34600	30000	26930	25780	23260	22250	21290	1500	2000	70540	24
	90.04	34600	30000	26930	25780	23260	22250	21290	1500	2000	70540	24
	108.23	34600	30000	26930	25780	23260	22250	21290	1500	2000	70540	24
	137.48	34600	30000	26930	25780	23260	22250	21290	1500	2000	70540	24
	146.25	26020	22550	20660	19790	17870	17100	16340	1500	2000	54730	24
	184.28	26020	22550	20660	19790	17870	17100	16340	1500	2000	54730	24
	203.13	26020	22550	20660	19790	17870	17100	16340	1500	2000	54730	24
	260.00	26020	22550	20660	19790	17870	17100	16340	1500	2000	54730	24
	305.50	26020	22550	20660	19790	17870	17100	16340	1500	2000	54730	24
4E	248.35	34600	30000	26930	25780	23260	22250	21290	2000	2500	70540	18
	304.29	34600	30000	26930	25780	23260	22250	21290	2000	2500	70540	18
	348.55	34600	30000	26930	25780	23260	22250	21290	2000	2500	70540	18
	441.82	34600	30000	26930	25780	23260	22250	21290	2000	2500	70540	18
	487.01	34600	30000	26930	25780	23260	22250	21290	2000	2500	70540	18
	618.64	34600	30000	26930	25780	23260	22250	21290	2000	2500	70540	18
	714.87	34600	30000	26930	25780	23260	22250	21290	2000	2500	70540	18
	859.22	34600	30000	26930	25780	23260	22250	21290	2000	2500	70540	18
	962.33	34600	30000	26930	25780	23260	22250	21290	2000	2500	70540	18
	1289.93	26020	22550	20660	19790	17870	17100	16340	2000	2500	54730	18
	1474.20	26020	22550	20660	19790	17870	17100	16340	2000	2500	54730	18
	1625.00	26020	22550	20660	19790	17870	17100	16340	2000	2500	54730	18
	2335.94	26020	22550	20660	19790	17870	17100	16340	2000	2500	54730	18
C2E	35.96	34600	30000	26930	25780	23260	22250	21290	1500	2000	70540	37
	45.68	34600	30000	26930	25780	23260	22250	21290	1500	2000	70540	37
	48.70	34600	30000	26930	25780	23260	22250	21290	1500	2000	70540	37
	61.86	34600	30000	26930	25780	23260	22250	21290	1500	2000	70540	37
	69.26	34600	30000	26930	25780	23260	22250	21290	1500	2000	70540	37
	87.98	34600	30000	26930	25780	23260	22250	21290	1500	2000	70540	37
	99.57	34600	30000	26930	25780	23260	22250	21290	1500	2000	70540	37
	126.48	34600	30000	26930	25780	23260	22250	21290	1500	2000	70540	37
	161.72	26020	22550	20660	19790	17870	17100	16340	1500	2000	54730	37
	186.88	26020	22550	20660	19790	17870	17100	16340	1500	2000	54730	37
	224.97	21080	18270	16740	16030	14480	13860	13240	1500	2000	44340	37
C3E	155.69	34600	30000	26930	25780	23260	22250	21290	1500	2000	70540	15
	165.97	34600	30000	26930	25780	23260	22250	21290	1500	2000	70540	15
	192.16	34600	30000	26930	25780	23260	22250	21290	1500	2000	70540	15
	243.12	34600	30000	26930	25780	23260	22250	21290	1500	2000	70540	15
	292.21	34600	30000	26930	25780	23260	22250	21290	1500	2000	70540	15
	371.18	34600	30000	26930	25780	23260	22250	21290	1500	2000	70540	15
	394.88	26020	22550	20660	19790	17870	17100	16340	1500	2000	54730	15
	511.88	26020	22550	20660	19790	17870	17100	16340	1500	2000	54730	15
	644.96	26020	22550	20660	19790	17870	17100	16340	1500	2000	54730	15
	710.94	26020	22550	20660	19790	17870	17100	16340	1500	2000	54730	15
	861.41	26020	22550	20660	19790	17870	17100	16340	1500	2000	54730	15
	1085.38	26020	22550	20660	19790	17870	17100	16340	1500	2000	54730	15
	1196.41	26020	22550	20660	19790	17870	17100	16340	1500	2000	54730	15
	1531.40	26020	22550	20660	19790	17870	17100	16340	1500	2000	54730	15
	1799.40	26020	22550	20660	19790	17870	17100	16340	1500	2000	54730	15

CHBNS 传承之道 稳行致远
THE WAY OF INHERITANCE IS STEADY AND FAR-REACHING
传动装置专业制造商
PROFESSIONAL MANUFACTURER OF TRANSMISSION DEVICE
N series 系列

428C2Z

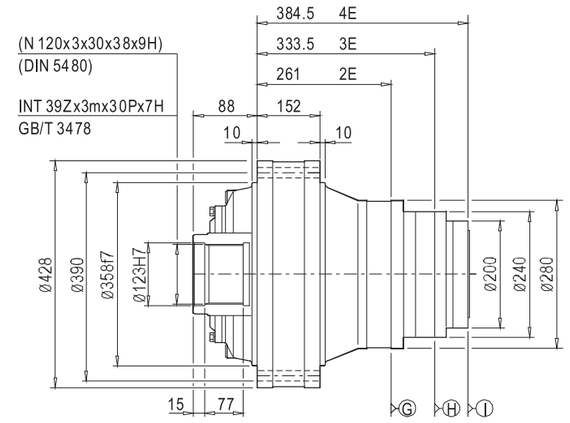

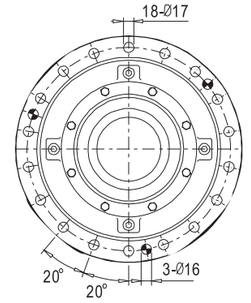

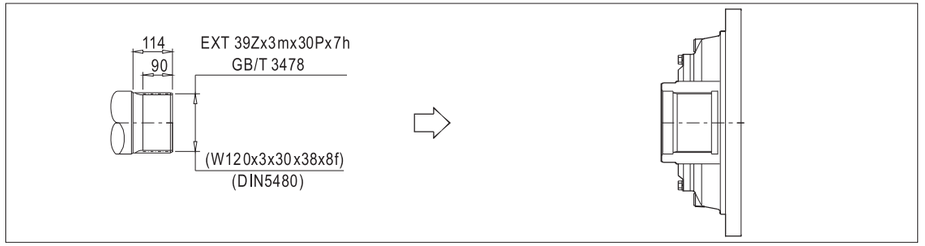

428C2H

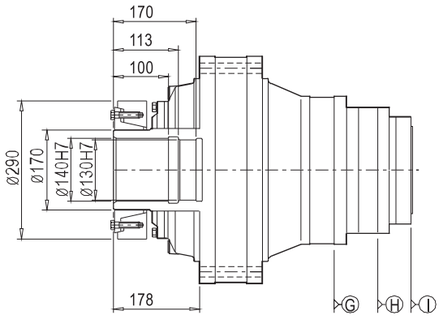

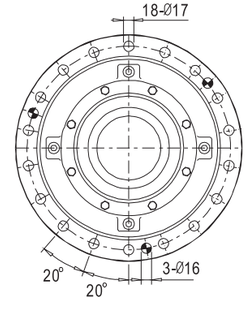

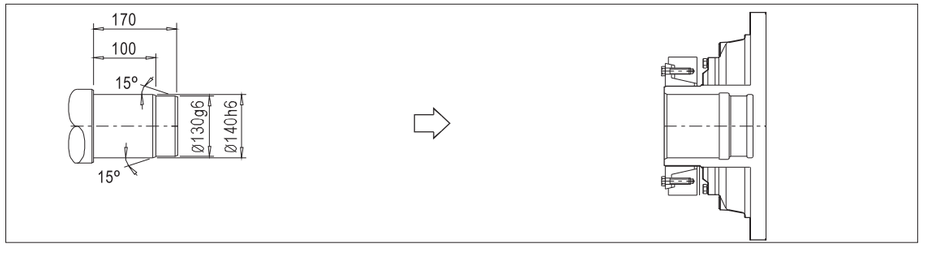

428C2C

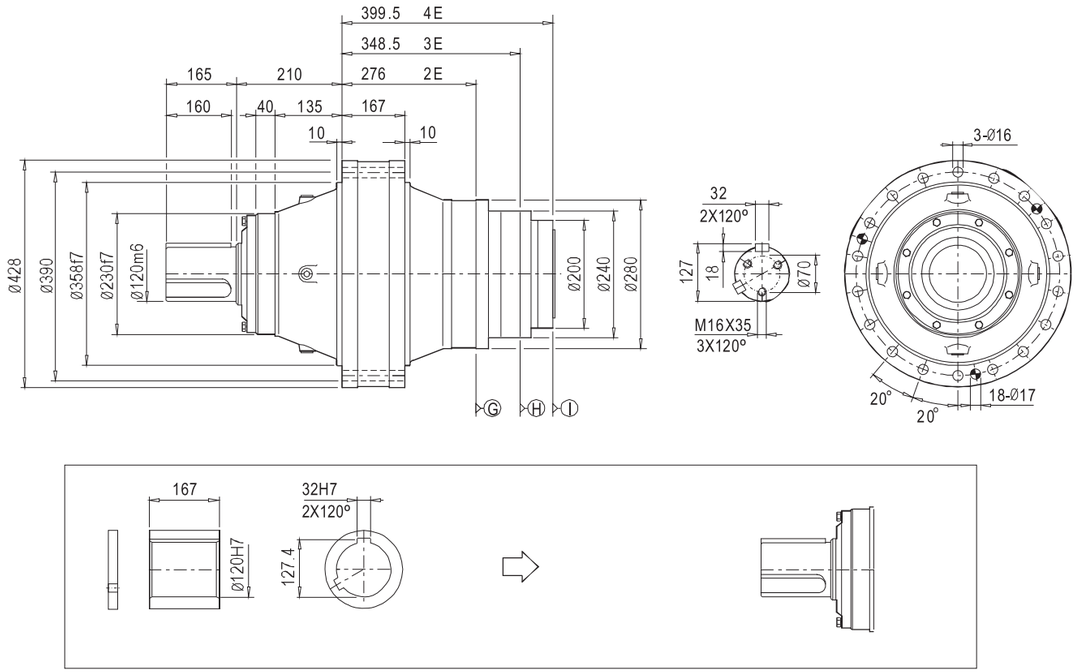

428C2S

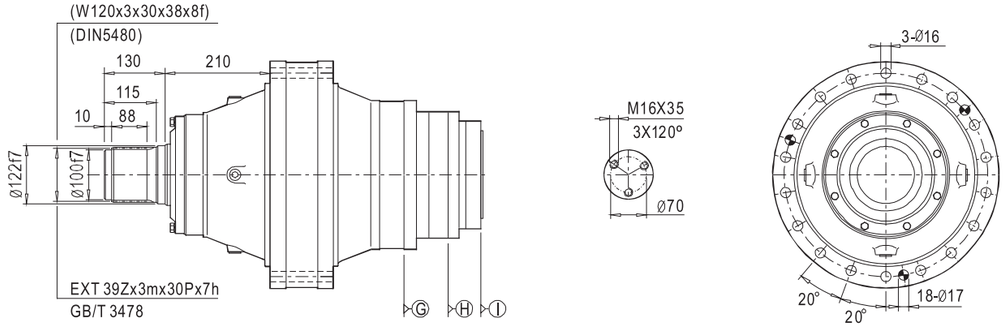

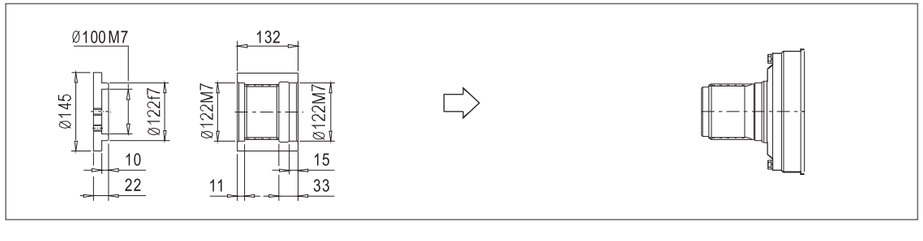

CHBNS 传承之道 稳行致远
THE WAY OF INHERITANCE IS STEADY AND FAR-REACHING
传动装置专业制造商
PROFESSIONAL MANUFACTURER OF TRANSMISSION DEVICE
N series 系列

428R2Z(H)

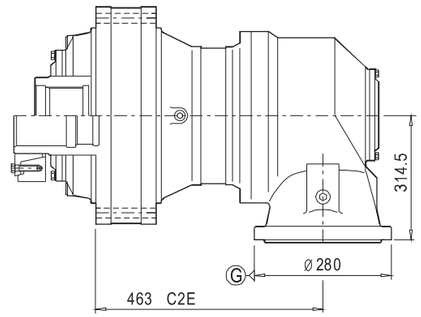

428R2C(S)

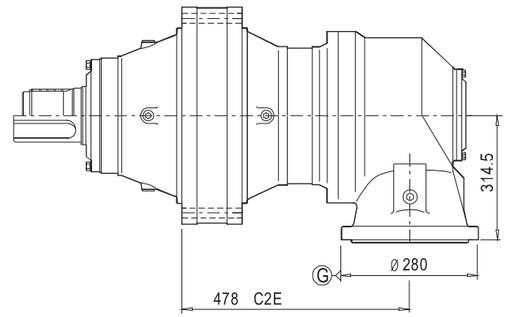

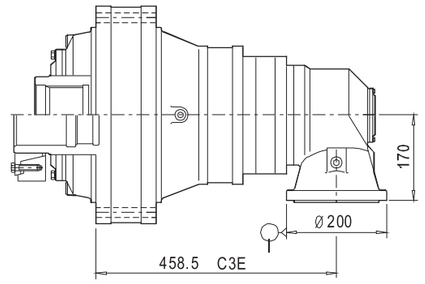

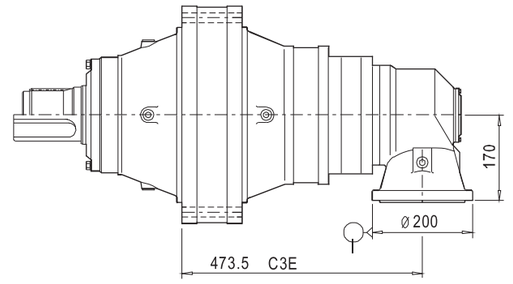

429	i	T2 [N.m] n2xh [r/minxh] 10000	25000	50000	100000	500000	1000000	2000000	n1 [r/min]	n1max [r/min]	T2max [N.m]	Pt [kW]
1E	3.63	44380	38380	34370	32180	28970	27680	26420	1200	1500	84870	58
	4	41590	35990	32240	29980	27000	25790	24660	1200	1500	80950	58
	4.5	40730	35290	31640	29330	26430	25280	24180	1200	1500	78780	58
	5.2	34600	30000	26930	25780	23260	22250	21290	1200	1500	70540	58
	6.25	26020	22550	20660	19790	17870	17100	16340	1200	1500	54730	58
2E	13.21	44380	38380	34370	32180	28970	27680	26420	1500	2000	84870	35
	14.37	44380	38380	34370	32180	28970	27680	26420	1500	2000	84870	35
	18.55	44380	38380	34370	32180	28970	27680	26420	1500	2000	84870	35
	20.44	41590	35990	32240	29980	27000	25790	24660	1500	2000	80950	35
	25.16	41590	35990	32240	29980	27000	25790	24660	1500	2000	80950	35
	28.31	40730	35290	31640	29330	26430	25280	24180	1500	2000	78780	35
	35.44	26020	22550	20660	19790	17870	17100	16340	1500	2000	54730	35
	43.75	26020	22550	20660	19790	17870	17100	16340	1500	2000	54730	35
3E	51.95	44380	38380	34370	32180	28970	27680	26420	1500	2000	84870	26
	60.03	44380	38380	34370	32180	28970	27680	26420	1500	2000	84870	26
	74.75	44380	38380	34370	32180	28970	27680	26420	1500	2000	84870	26
	84.01	41590	35990	32240	29980	27000	25790	24660	1500	2000	80950	26
	102.20	41590	35990	32240	29980	27000	25790	24660	1500	2000	80950	26
	127.95	41590	35990	32240	29980	27000	25790	24660	1500	2000	80950	26
	159.92	40730	35290	31640	29330	26430	25280	24180	1500	2000	78780	26
	177.19	40730	35290	31640	29330	26430	25280	24180	1500	2000	78780	26
	204.30	40730	35290	31640	29330	26430	25280	24180	1500	2000	78780	26
	249.83	26020	22550	20660	19790	17870	17100	16340	1500	2000	54730	26
	287.75	26020	22550	20660	19790	17870	17100	16340	1500	2000	54730	26
4E	213.50	44380	38380	34370	32180	28970	27680	26420	1500	2000	84870	20
	265.86	44380	38380	34370	32180	28970	27680	26420	1500	2000	84870	20
	307.22	44380	38380	34370	32180	28970	27680	26420	1500	2000	84870	20
	336.37	44380	38380	34370	32180	28970	27680	26420	1500	2000	84870	20
	423.83	44380	38380	34370	32180	28970	27680	26420	1500	2000	84870	20
	523.24	44380	38380	34370	32180	28970	27680	26420	1500	2000	84870	20
	597.99	44380	38380	34370	32180	28970	27680	26420	1500	2000	84870	20
	702.64	44380	38380	34370	32180	28970	27680	26420	1500	2000	84870	20
	812.83	44380	38380	34370	32180	28970	27680	26420	1500	2000	84870	20
	1023.64	44380	38380	34370	32180	28970	27680	26420	1500	2000	84870	20
	1202.77	41590	35990	32240	29980	27000	25790	24660	1500	2000	80950	20
	1417.51	40730	35290	31640	29330	26430	25280	24180	1500	2000	78780	20
	1726.08	34600	30000	26930	25780	23260	22250	21290	1500	2000	70540	20
	2085.28	26020	22550	20660	19790	17870	17100	16340	1500	2000	54730	20
	2298.59	26020	22550	20660	19790	17870	17100	16340	1500	2000	54730	20

CHBNS 传承之道 稳行致远
THE WAY OF INHERITANCE IS STEADY AND FAR-REACHING
传动装置专业制造商
PROFESSIONAL MANUFACTURER OF TRANSMISSION DEVICE
N series 系列

429	i	T2 [N.m] n2xh [r/minxh] 10000	25000	50000	100000	500000	1000000	2000000	n1 [r/min]	n1max [r/min]	T2max [N.m]	Pt [kW]
CE	12.98	26020	22550	20660	19790	17870	17100	16340	1500	2000	54730	70
	17.58	26020	22550	20660	19790	17870	17100	16340	1500	2000	54730	70
C2E	27.44	44380	38380	34370	32180	28970	27680	26420	1500	2000	84870	40
	29.86	44380	38380	34370	32180	28970	27680	26420	1500	2000	84870	40
	37.16	44380	38380	34370	32180	28970	27680	26420	1500	2000	84870	40
	40.43	44380	38380	34370	32180	28970	27680	26420	1500	2000	84870	40
	52.85	44380	38380	34370	32180	28970	27680	26420	1500	2000	84870	40
	57.50	44380	38380	34370	32180	28970	27680	26420	1500	2000	84870	40
	74.20	44380	38380	34370	32180	28970	27680	26420	1500	2000	84870	40
	81.76	41590	35990	32240	29980	27000	25790	24660	1500	2000	80950	40
	100.64	41590	35990	32240	29980	27000	25790	24660	1500	2000	80950	40
	113.22	40730	35290	31640	29330	26430	25280	24180	1500	2000	78780	40
	144.67	41590	35990	32240	29980	27000	25790	24660	1500	2000	80950	40
	162.75	40730	35290	31640	29330	26430	25280	24180	1500	2000	78780	40
	203.77	26020	22550	20660	19790	17870	17100	16340	1500	2000	54730	40
	251.56	26020	22550	20660	19790	17870	17100	16340	1500	2000	54730	40
C3E	147.84	44380	38380	34370	32180	28970	27680	26420	1500	2000	84870	22
	212.11	44380	38380	34370	32180	28970	27680	26420	1500	2000	84870	22
	245.10	44380	38380	34370	32180	28970	27680	26420	1500	2000	84870	22
	305.90	44380	38380	34370	32180	28970	27680	26420	1500	2000	84870	22
	353.48	44380	38380	34370	32180	28970	27680	26420	1500	2000	84870	22
	440.19	44380	38380	34370	32180	28970	27680	26420	1500	2000	84870	22
	494.72	41590	35990	32240	29980	27000	25790	24660	1500	2000	80950	22
	601.84	41590	35990	32240	29980	27000	25790	24660	1500	2000	80950	22
	753.51	41590	35990	32240	29980	27000	25790	24660	1500	2000	80950	22
C4E	829.49	44380	38380	34370	32180	28970	27680	26420	1500	2000	84870	16
	1075.26	44380	38380	34370	32180	28970	27680	26420	1500	2000	84870	16
	1177.30	44380	38380	34370	32180	28970	27680	26420	1500	2000	84870	16
	1483.39	44380	38380	34370	32180	28970	27680	26420	1500	2000	84870	16
	1831.35	44380	38380	34370	32180	28970	27680	26420	1500	2000	84870	16
	2092.97	44380	38380	34370	32180	28970	27680	26420	1500	2000	84870	16
	2459.24	44380	38380	34370	32180	28970	27680	26420	1500	2000	84870	16
	2844.91	44380	38380	34370	32180	28970	27680	26420	1500	2000	84870	16
	3582.72	44380	38380	34370	32180	28970	27680	26420	1500	2000	84870	16
	4138.55	44380	38380	34370	32180	28970	27680	26420	1500	2000	84870	16
	4787.57	44380	38380	34370	32180	28970	27680	26420	1500	2000	84870	16
	6029.21	44380	38380	34370	32180	28970	27680	26420	1500	2000	84870	16
	7084.32	41590	35990	32240	29980	27000	25790	24660	1500	2000	80950	16

429C2Z

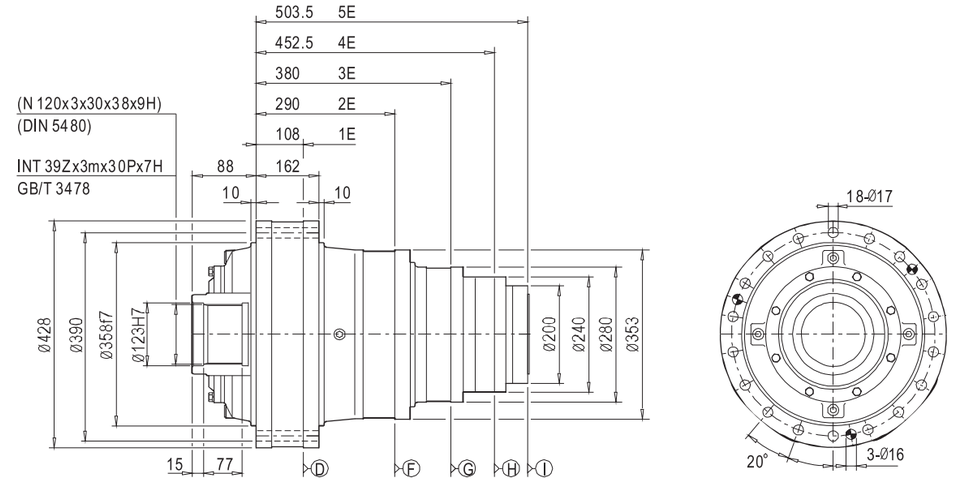

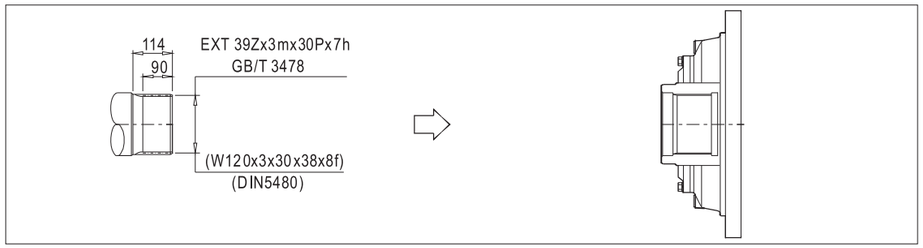

429C2H

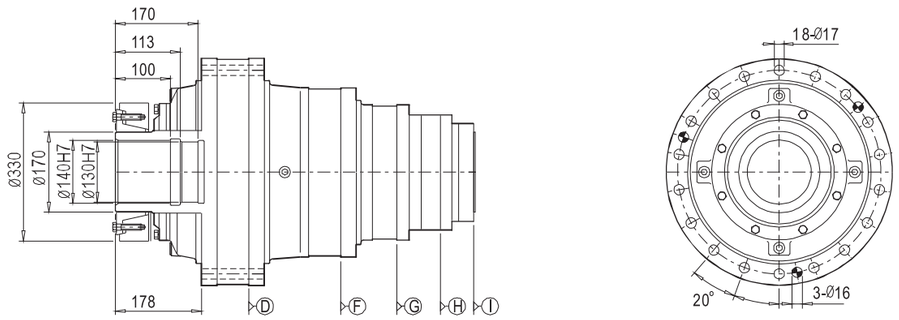

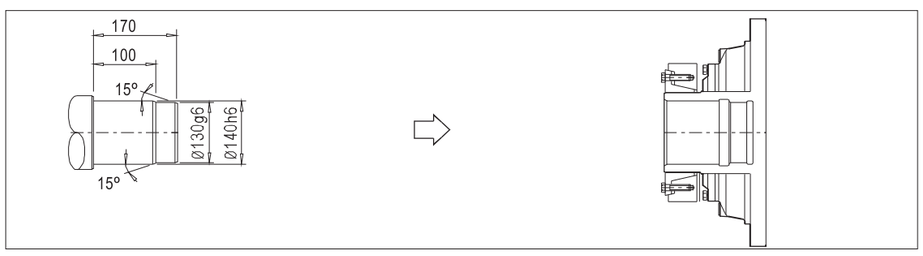

CHBNS 传承之道 稳行致远
THE WAY OF INHERITANCE IS STEADY AND FAR-REACHING
传动装置专业制造商
PROFESSIONAL MANUFACTURER OF TRANSMISSION DEVICE
N series 系列

429C2C

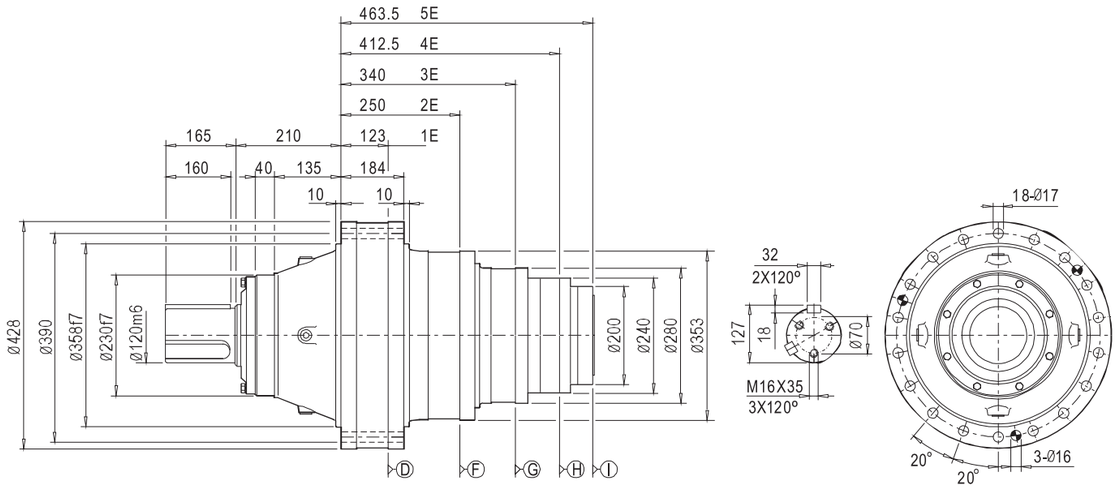

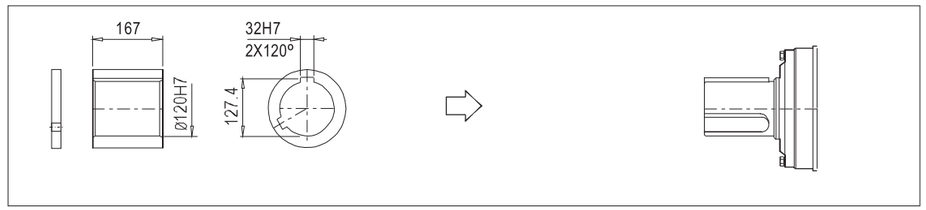

429C2S

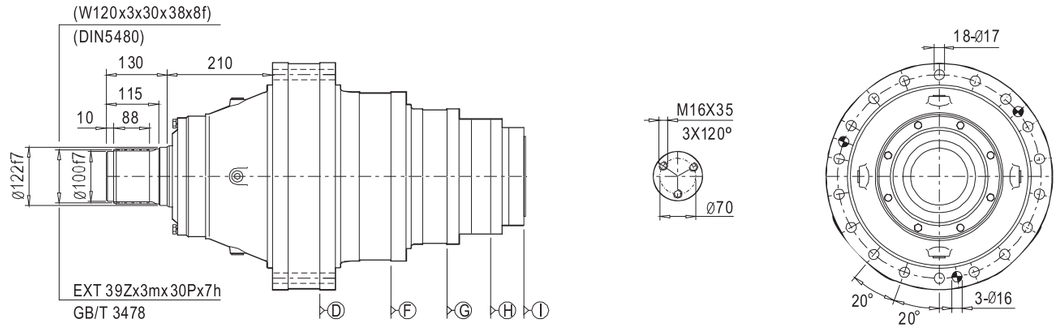

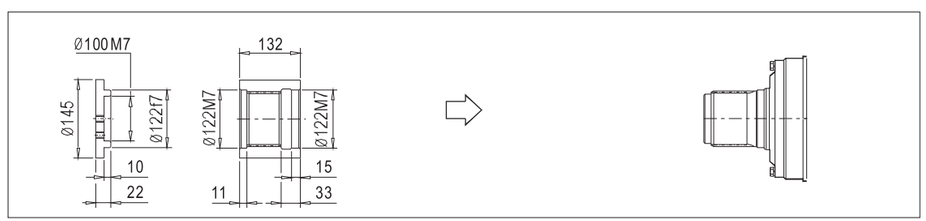

429R2C(S)

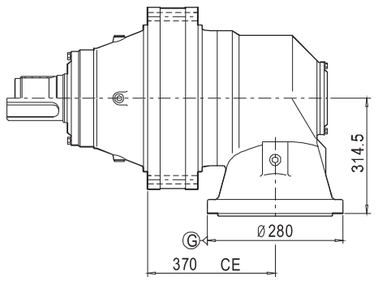

429R2Z(H)

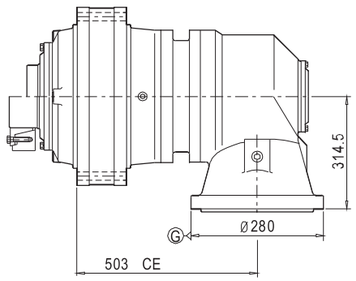

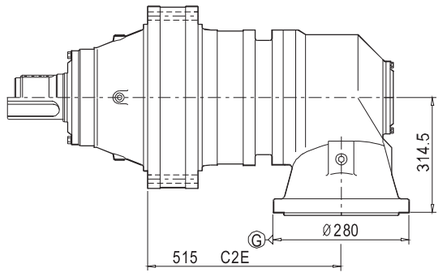

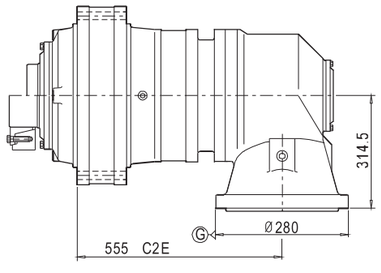

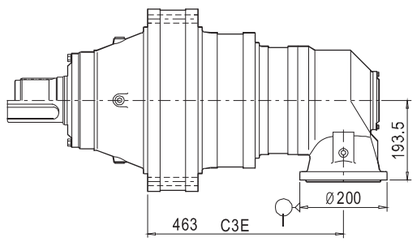

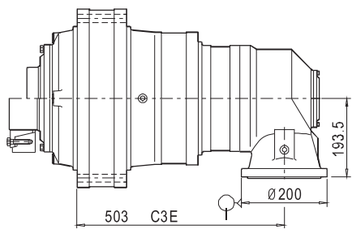

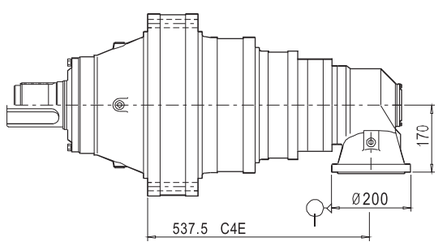

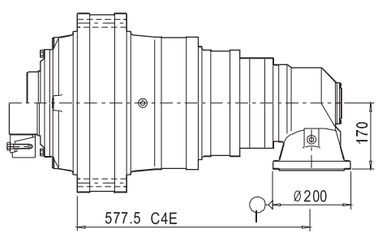

CHBNS 传承之道 稳行致远
THE WAY OF INHERITANCE IS STEADY AND FAR-REACHING
传动装置专业制造商
PROFESSIONAL MANUFACTURER OF TRANSMISSION DEVICE
N series 系列

445	i	T2 [N.m] n2xh [r/minxh] 10000	25000	50000	100000	500000	1000000	2000000	n1 [r/min]	n1max [r/min]	T2max [N.m]	Pt [kW]
1E	3.2	38450	33160	29620	28050	25180	24040	22930	800	1000	72040	60
	3.75	40040	34610	30980	28930	26020	24870	23750	1000	1200	77120	60
	4.14	39680	34340	30780	28560	25720	24580	23500	1200	1500	77310	60
	4.67	36780	31870	28570	27000	24350	23280	22270	1200	1500	73600	60
	5.4	31050	26920	24260	23210	20950	20050	19170	1200	1500	63760	60
	6.5	24010	20830	19190	18360	16570	15860	15180	1200	1500	50920	60
2E	12.67	38450	33160	29620	28050	25180	24040	22930	1500	2000	72040	36
	14.85	40040	34610	30980	28930	26020	24870	23750	1500	2000	77120	36
	19.16	40040	34610	30980	28930	26020	24870	23750	1500	2000	77120	36
	21.16	39680	34340	30780	28560	25720	24580	23500	1500	2000	77310	36
	26.04	39680	34340	30780	28560	25720	24580	23500	1500	2000	77310	36
	29.37	36780	31870	28570	27000	24350	23280	22270	1500	2000	73600	36
	33.75	31050	26920	24260	23210	20950	20050	19170	1500	2000	63760	36
	45.50	24010	20830	19190	18360	16570	15860	15180	1500	2000	50920	36
3E	45.79	38450	33160	29620	28050	25180	24040	22930	1500	2000	72040	26
	52.42	38450	33160	29620	28050	25180	24040	22930	1500	2000	72040	26
	61.43	40040	34610	30980	28930	26020	24870	23750	1500	2000	77120	26
	73.58	40040	34610	30980	28930	26020	24870	23750	1500	2000	77120	26
	86.23	40040	34610	30980	28930	26020	24870	23750	1500	2000	77120	26
	95.81	40040	34610	30980	28930	26020	24870	23750	1500	2000	77120	26
	130.20	39680	34340	30780	28560	25720	24580	23500	1500	2000	77310	26
	147.13	39680	34340	30780	28560	25720	24580	23500	1500	2000	77310	26
	183.59	39680	34340	30780	28560	25720	24580	23500	1500	2000	77310	26
	211.45	39680	34340	30780	28560	25720	24580	23500	1500	2000	77310	26
	274.05	31050	26920	24260	23210	20950	20050	19170	1500	2000	63760	26
	329.88	24010	20830	19190	18360	16570	15860	15180	1500	2000	50920	26
4E	220.55	40040	34610	30980	28930	26020	24870	23750	1500	2000	77120	20
	241.48	40040	34610	30980	28930	26020	24870	23750	1500	2000	77120	20
	304.27	40040	34610	30980	28930	26020	24870	23750	1500	2000	77120	20
	335.39	40040	34610	30980	28930	26020	24870	23750	1500	2000	77120	20
	429.30	40040	34610	30980	28930	26020	24870	23750	1500	2000	77120	20
	504.43	40040	34610	30980	28930	26020	24870	23750	1500	2000	77120	20
	582.89	40040	34610	30980	28930	26020	24870	23750	1500	2000	77120	20
	725.87	40040	34610	30980	28930	26020	24870	23750	1500	2000	77120	20
	836.70	40040	34610	30980	28930	26020	24870	23750	1500	2000	77120	20
	959.66	40040	34610	30980	28930	26020	24870	23750	1500	2000	77120	20
	1174.97	36780	31870	28570	27000	24350	23280	22270	1500	2000	73600	20
	1560.07	36780	31870	28570	27000	24350	23280	22270	1500	2000	73600	20
	1728.50	36780	31870	28570	27000	24350	23280	22270	1500	2000	73600	20
	1985.99	31050	26920	24260	23210	20950	20050	19170	1500	2000	63760	20
	2390.54	24010	20830	19190	18360	16570	15860	15180	1500	2000	50920	20

445	i	T2 [N.m] n2xh [r/minxh] 10000	25000	50000	100000	500000	1000000	2000000	n1 [r/min]	n1max [r/min]	T2max [N.m]	Pt [kW]
CE	11.22	29810	25850	23290	22290	20120	19250	18410	1500	2000	63760	75
	13.50	24010	20830	19190	18360	16570	15860	15180	1500	2000	50920	75
	18.28	24010	20830	19190	18360	16570	15860	15180	1500	2000	50920	75
C2E	26.32	38450	33160	29620	28050	25180	24040	22930	1500	2000	72040	40
	30.84	40040	34610	30980	28930	26020	24870	23750	1500	2000	77120	40
	39.80	40040	34610	30980	28930	26020	24870	23750	1500	2000	77120	40
	43.94	39680	34340	30780	28560	25720	24580	23500	1500	2000	77310	40
	53.89	40040	34610	30980	28930	26020	24870	23750	1500	2000	77120	40
	59.50	39680	34340	30780	28560	25720	24580	23500	1500	2000	77310	40
	73.24	39680	34340	30780	28560	25720	24580	23500	1500	2000	77310	40
	84.62	39680	34340	30780	28560	25720	24580	23500	1500	2000	77310	40
	104.16	39680	34340	30780	28560	25720	24580	23500	1500	2000	77310	40
	121.64	39680	34340	30780	28560	25720	24580	23500	1500	2000	77310	40
	149.73	39680	34340	30780	28560	25720	24580	23500	1500	2000	77310	40
	168.90	36780	31870	28570	27000	24350	23280	22270	1500	2000	73600	40
	194.06	31050	26920	24260	23210	20950	20050	19170	1500	2000	63760	40
	261.63	24010	20830	19190	18360	16570	15860	15180	1500	2000	50920	40
C3E	130.33	38450	33160	29620	28050	25180	24040	22930	1500	2000	72040	22
	149.18	38450	33160	29620	28050	25180	24040	22930	1500	2000	72040	22
	214.03	38450	33160	29620	28050	25180	24040	22930	1500	2000	72040	22
	250.82	40040	34610	30980	28930	26020	24870	23750	1500	2000	77120	22
	300.43	40040	34610	30980	28930	26020	24870	23750	1500	2000	77120	22
	352.11	40040	34610	30980	28930	26020	24870	23750	1500	2000	77120	22
	433.28	40040	34610	30980	28930	26020	24870	23750	1500	2000	77120	22
	507.81	40040	34610	30980	28930	26020	24870	23750	1500	2000	77120	22
	564.23	40040	34610	30980	28930	26020	24870	23750	1500	2000	77120	22
	766.75	39680	34340	30780	28560	25720	24580	23500	1500	2000	77310	22
C4E	771.94	40040	34610	30980	28930	26020	24870	23750	1500	2000	77120	16
	845.18	40040	34610	30980	28930	26020	24870	23750	1500	2000	77120	16
	1064.93	40040	34610	30980	28930	26020	24870	23750	1500	2000	77120	16
	1173.87	40040	34610	30980	28930	26020	24870	23750	1500	2000	77120	16
	1502.55	40040	34610	30980	28930	26020	24870	23750	1500	2000	77120	16
	1765.50	40040	34610	30980	28930	26020	24870	23750	1500	2000	77120	16
	2040.13	40040	34610	30980	28930	26020	24870	23750	1500	2000	77120	16
	2540.54	40040	34610	30980	28930	26020	24870	23750	1500	2000	77120	16
	2928.44	40040	34610	30980	28930	26020	24870	23750	1500	2000	77120	16
	3433.25	40040	34610	30980	28930	26020	24870	23750	1500	2000	77120	16
	4275.36	40040	34610	30980	28930	26020	24870	23750	1500	2000	77120	16
	4928.14	40040	34610	30980	28930	26020	24870	23750	1500	2000	77120	16
	5652.39	40040	34610	30980	28930	26020	24870	23750	1500	2000	77120	16
	6920.59	36780	31870	28570	27000	24350	23280	22270	1500	2000	73600	16

CHBNS 传承之道 稳行致远
THE WAY OF INHERITANCE IS STEADY AND FAR-REACHING
传动装置专业制造商
PROFESSIONAL MANUFACTURER OF TRANSMISSION DEVICE
N series 系列

446	i	T2 [N.m] n2xh [r/minxh] 10000	25000	50000	100000	500000	1000000	2000000	n1 [r/min]	n1max [r/min]	T2max [N.m]	Pt [kW]
2E	14.44	52950	45440	43540	41660	37560	36970	34160	1000	1200	111000	60
	16.35	52950	45440	43540	41660	37560	36970	34160	1200	1500	111000	60
	19.16	52950	45440	43540	41660	37560	36970	34160	1200	1500	111000	60
3E	39.71	52950	45440	43540	41660	37560	36970	34160	1200	1500	111000	36
	53.66	52950	45440	43540	41660	37560	36970	34160	1200	1500	111000	36
	64.97	52950	45440	43540	41660	37560	36970	34160	1200	1500	111000	36
	73.58	52950	45440	43540	41660	37560	36970	34160	1200	1500	111000	36
	85.02	52950	45440	43540	41660	37560	36970	34160	1200	1500	111000	36
	102.35	52950	45440	43540	41660	37560	36970	34160	1200	1500	111000	36
4E	140.97	52950	45440	43540	41660	37560	36970	34160	1500	2000	111000	26
	163.21	52950	45440	43540	41660	37560	36970	34160	1500	2000	111000	26
	178.70	52950	45440	43540	41660	37560	36970	34160	1500	2000	111000	26
	198.55	52950	45440	43540	41660	37560	36970	34160	1500	2000	111000	26
	248.19	52950	45440	43540	41660	37560	36970	34160	1500	2000	111000	26
	304.27	52950	45440	43540	41660	37560	36970	34160	1500	2000	111000	26
	335.39	52950	45440	43540	41660	37560	36970	34160	1500	2000	111000	26
	429.30	52950	45440	43540	41660	37560	36970	34160	1500	2000	111000	26
	504.43	52950	45440	43540	41660	37560	36970	34160	1500	2000	111000	26
	600.60	52950	45440	43540	41660	37560	36970	34160	1500	2000	111000	26
	705.71	52950	45440	43540	41660	37560	36970	34160	1500	2000	111000	26
	799.19	52950	45440	43540	41660	37560	36970	34160	1500	2000	111000	26
5E	982.83	52950	45440	43540	41660	37560	36970	34160	1500	2000	111000	20
	1240.95	52950	45440	43540	41660	37560	36970	34160	1500	2000	111000	20
	1547.98	52950	45440	43540	41660	37560	36970	34160	1500	2000	111000	20
	1729.69	52950	45440	43540	41660	37560	36970	34160	1500	2000	111000	20
	2169.29	52950	45440	43540	41660	37560	36970	34160	1500	2000	111000	20
	2410.32	52950	45440	43540	41660	37560	36970	34160	1500	2000	111000	20
	3012.90	52950	45440	43540	41660	37560	36970	34160	1500	2000	111000	20
	3374.44	52950	45440	43540	41660	37560	36970	34160	1500	2000	111000	20
	4251.00	52950	45440	43540	41660	37560	36970	34160	1500	2000	111000	20
	4797.46	52950	45440	43540	41660	37560	36970	34160	1500	2000	111000	20
	6110.81	52950	45440	43540	41660	37560	36970	34160	1500	2000	111000	20

446	i	T_2 [N.m] n2xh [r/minxh] 10000	25000	50000	100000	500000	1000000	2000000	n_1 [r/min]	n_{1max} [r/min]	T_{2max} [N.m]	P_t [kW]
C2E	29.99	52950	45440	43540	41660	37560	36970	34160	1500	2000	111000	75
	33.96	52950	45440	43540	41660	37560	36970	34160	1500	2000	111000	75
	45.98	52950	45440	43540	41660	37560	36970	34160	1500	2000	111000	75
	53.89	45540	39080	37450	35830	32310	31800	29380	1500	2000	95460	75
	76.65	45540	39080	37450	35830	32310	31800	29380	1500	2000	95460	75
C3E	82.48	52950	45440	43540	41660	37560	36970	34160	1500	2000	111000	40
	99.85	52950	45440	43540	41660	37560	36970	34160	1500	2000	111000	40
	134.94	52950	45440	43540	41660	37560	36970	34160	1500	2000	111000	40
	152.73	52950	45440	43540	41660	37560	36970	34160	1500	2000	111000	40
	184.91	52950	45440	43540	41660	37560	36970	34160	1500	2000	111000	40
	209.41	52950	45440	43540	41660	37560	36970	34160	1500	2000	111000	40
	241.98	52950	45440	43540	41660	37560	36970	34160	1500	2000	111000	40
	300.43	52950	45440	43540	41660	37560	36970	34160	1500	2000	111000	40
	382.59	52950	45440	43540	41660	37560	36970	34160	1500	2000	111000	40
	433.28	52950	45440	43540	41660	37560	36970	34160	1500	2000	111000	40
	500.67	52950	45440	43540	41660	37560	36970	34160	1500	2000	111000	40
	602.73	52950	45440	43540	41660	37560	36970	34160	1500	2000	111000	40
C4E	625.44	52950	45440	43540	41660	37560	36970	34160	1500	2000	111000	22
	694.93	52950	45440	43540	41660	37560	36970	34160	1500	2000	111000	22
	868.66	52950	45440	43540	41660	37560	36970	34160	1500	2000	111000	22
	1064.93	52950	45440	43540	41660	37560	36970	34160	1500	2000	111000	22
	1173.87	52950	45440	43540	41660	37560	36970	34160	1500	2000	111000	22
	1502.55	52950	45440	43540	41660	37560	36970	34160	1500	2000	111000	22
	1765.50	52950	45440	43540	41660	37560	36970	34160	1500	2000	111000	22
	2102.10	52950	45440	43540	41660	37560	36970	34160	1500	2000	111000	22
	2469.97	52950	45440	43540	41660	37560	36970	34160	1500	2000	111000	22
	2971.08	52950	45440	43540	41660	37560	36970	34160	1500	2000	111000	22
	3537.53	52950	45440	43540	41660	37560	36970	34160	1500	2000	111000	22
	4156.60	52950	45440	43540	41660	37560	36970	34160	1500	2000	111000	22
	4707.22	52950	45440	43540	41660	37560	36970	34160	1500	2000	111000	22

CHBNS 传承之道 稳行致远
THE WAY OF INHERITANCE IS STEADY AND FAR-REACHING
传动装置专业制造商
PROFESSIONAL MANUFACTURER OF TRANSMISSION DEVICE
N series 系列

445C2Z
446C2Z

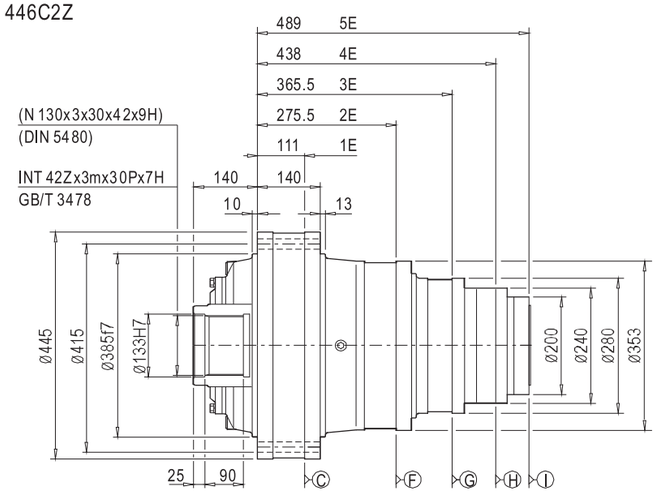

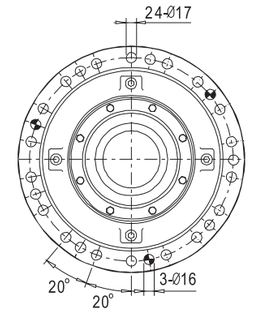

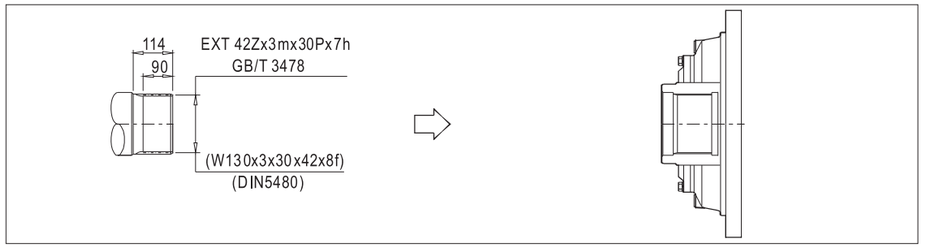

445C2H
446C2H

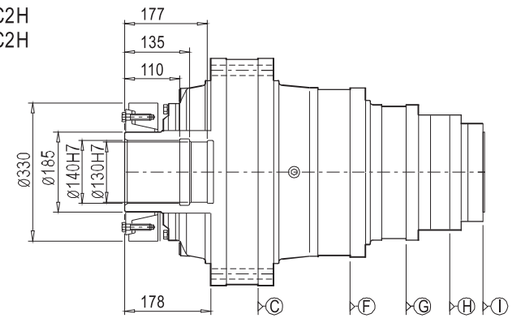

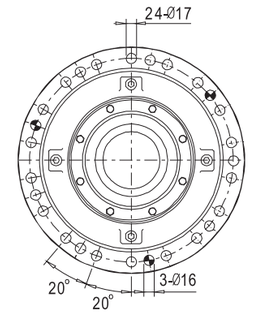

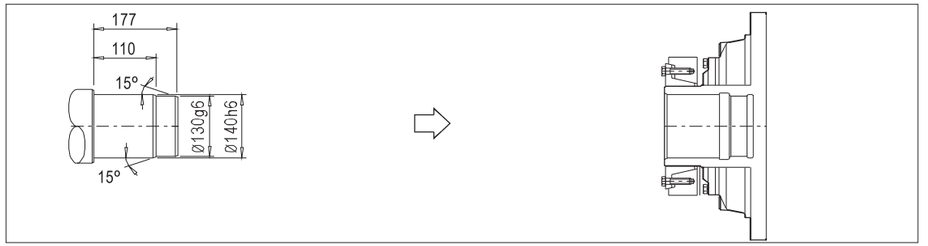

445C2C
446C2C

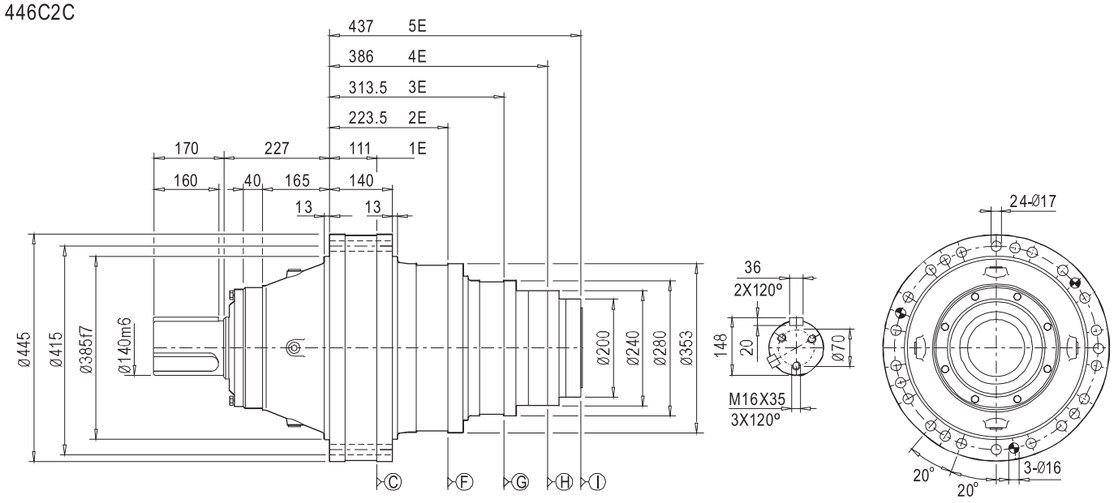

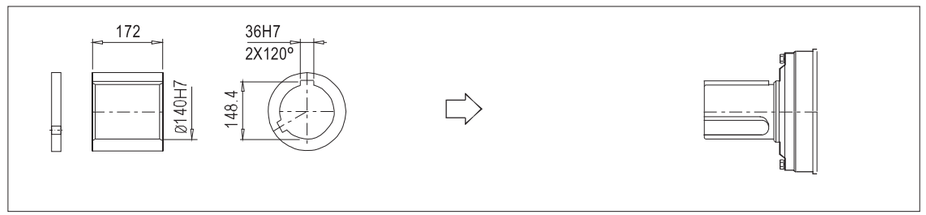

445C2S
446C2S

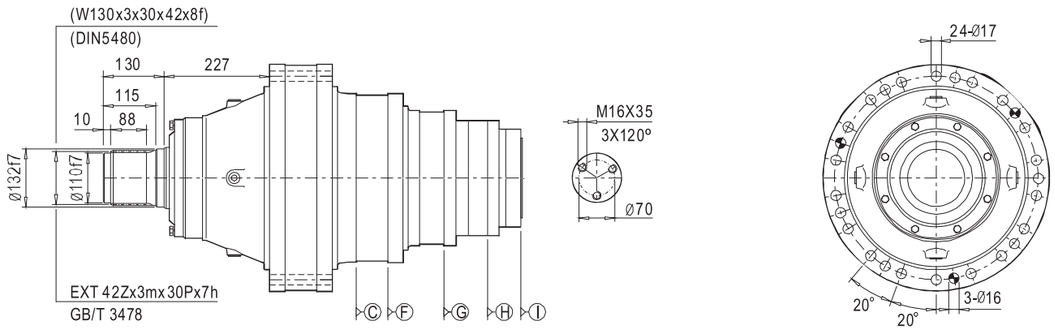

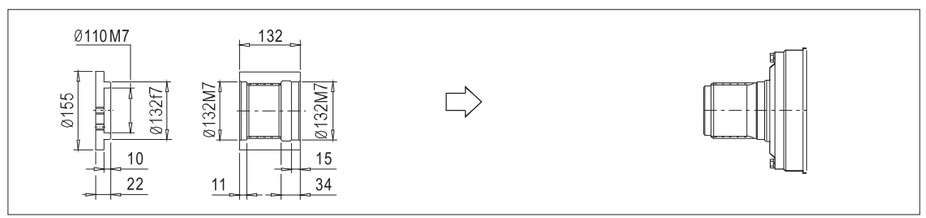

445R2C(S)
446R2C(S)

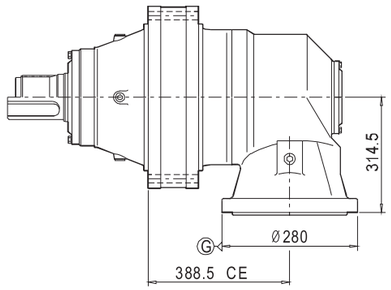

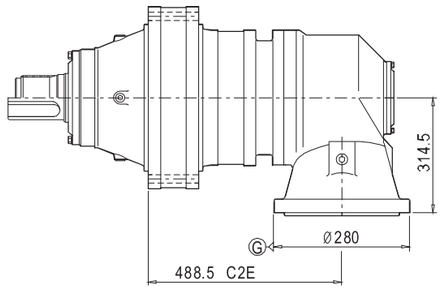

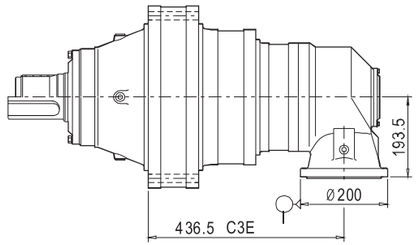

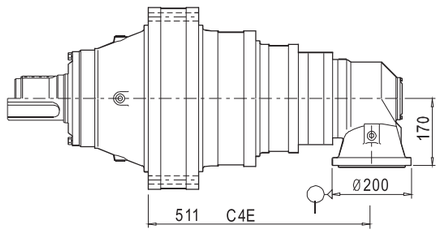

445R2Z(H)
446R2Z(H)

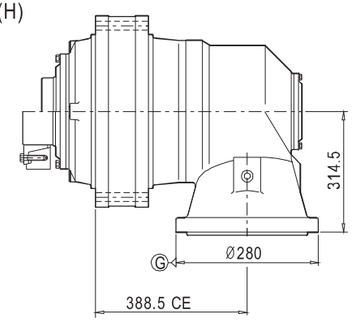

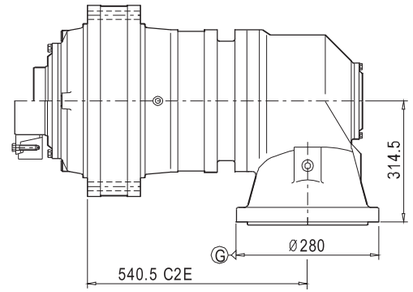

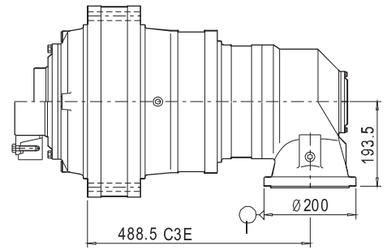

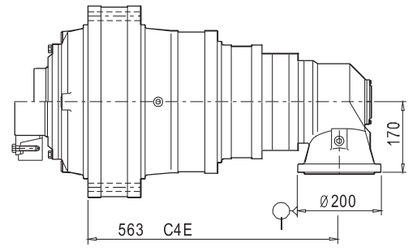

510	i	T_2 [N.m] n2xh [r/minxh] 10000	25000	50000	100000	500000	1000000	2000000	n_1 [r/min]	n_{1max} [r/min]	T_{2max} [N.m]	P_t [kW]
1E	3.64	79980	69200	62550	59630	54090	51760	49430	800	1000	159250	65
	4.36	80020	69360	62240	57670	52020	49740	47590	800	1000	154640	65
	5.11	62160	53890	48340	46200	41720	39910	38170	800	1000	126180	65
	6.29	48930	42470	38980	37320	33630	32260	30870	800	1000	102970	65
2E	14.05	79980	69200	62550	59630	54090	51760	49430	1500	2000	159250	44
	15.76	79980	69200	62550	59630	54090	51760	49430	1500	2000	159250	44
	18.20	79980	69200	62550	59630	54090	51760	49430	1500	2000	159250	44
	21.80	80020	69360	62240	57670	52020	49740	47590	1500	2000	154640	44
	25.55	62160	53890	48340	46200	41720	39910	38170	1500	2000	126180	44
	30.66	62160	53890	48340	46200	41720	39910	38170	1500	2000	126180	44
	37.74	48930	42470	38980	37320	33630	32260	30870	1500	2000	102970	44
3E	44.68	79980	69200	62550	59630	54090	51760	49430	600	800	159250	32
	53.52	80020	69360	62240	57670	52020	49740	47590	600	800	154640	32
	61.26	80020	69360	62240	57670	52020	49740	47590	1500	2000	154640	32
	73.38	80020	69360	62240	57670	52020	49740	47590	1500	2000	154640	32
	82.30	80020	69360	62240	57670	52020	49740	47590	1500	2000	154640	32
	95.42	80020	69360	62240	57670	52020	49740	47590	1500	2000	154640	32
	117.81	80020	69360	62240	57670	52020	49740	47590	1500	2000	154640	32
	152.60	80020	69360	62240	57670	52020	49740	47590	1500	2000	154640	32
	178.85	62160	53890	48340	46200	41720	39910	38170	1500	2000	126180	32
	214.62	62160	53890	48340	46200	41720	39910	38170	1500	2000	126180	32
	264.18	48930	42470	38980	37320	33630	32260	30870	1500	2000	102970	32
4E	178.22	80020	69360	62240	57670	52020	49740	47590	1500	2000	154640	25
	219.96	80020	69360	62240	57670	52020	49740	47590	1500	2000	154640	25
	251.78	80020	69360	62240	57670	52020	49740	47590	1500	2000	154640	25
	306.30	80020	69360	62240	57670	52020	49740	47590	1500	2000	154640	25
	347.34	80020	69360	62240	57670	52020	49740	47590	1500	2000	154640	25
	428.82	80020	69360	62240	57670	52020	49740	47590	1500	2000	154640	25
	514.35	80020	69360	62240	57670	52020	49740	47590	1500	2000	154640	25
	576.08	80020	69360	62240	57670	52020	49740	47590	1500	2000	154640	25
	667.97	80020	69360	62240	57670	52020	49740	47590	1500	2000	154640	25
	896.98	80020	69360	62240	57670	52020	49740	47590	1500	2000	154640	25
	988.74	80020	69360	62240	57670	52020	49740	47590	1500	2000	154640	25
	1277.50	62160	53890	48340	46200	41720	39910	38170	1500	2000	126180	25
	1501.06	62160	53890	48340	46200	41720	39910	38170	1500	2000	126180	25
	1801.28	62160	53890	48340	46200	41720	39910	38170	1500	2000	126180	25
	2217.23	48930	42470	38980	37320	33630	32260	30870	1500	2000	102970	25
5E	1246.30	80020	69360	62240	57670	52020	49740	47590	2000	2500	154640	20
	1573.61	80020	69360	62240	57670	52020	49740	47590	2000	2500	154640	20
	1762.44	80020	69360	62240	57670	52020	49740	47590	2000	2500	154640	20
	2014.22	80020	69360	62240	57670	52020	49740	47590	2000	2500	154640	20
	2546.06	80020	69360	62240	57670	52020	49740	47590	2000	2500	154640	20
	2916.39	80020	69360	62240	57670	52020	49740	47590	2000	2500	154640	20
	3600.48	80020	69360	62240	57670	52020	49740	47590	2000	2500	154640	20
	4114.84	80020	69360	62240	57670	52020	49740	47590	2000	2500	154640	20

CHBNS 传承之道 稳行致远
THE WAY OF INHERITANCE IS STEADY AND FAR-REACHING
传动装置专业制造商
PROFESSIONAL MANUFACTURER OF TRANSMISSION DEVICE
N series 系列

510	i	T_2 [N.m] n2xh [r/minxh] 10000	25000	50000	100000	500000	1000000	2000000	n_1 [r/min]	n_{1max} [r/min]	T_{2max} [N.m]	P_t [kW]
CE	12.50	80020	69360	62240	57670	52020	49740	47590	1500	2000	154640	64
	14.65	62160	53890	48340	46200	41720	39910	38170	1500	2000	126180	64
	18.03	48930	42470	38980	37320	33630	32260	30870	1500	2000	102970	64
	30.05	48930	42470	38980	37320	33630	32260	30870	1500	2000	102970	64
C2E	29.18	79980	69200	62550	59630	54090	51760	49430	1500	2000	159250	39
	32.73	79980	69200	62550	59630	54090	51760	49430	1500	2000	159250	39
	37.80	79980	69200	62550	59630	54090	51760	49430	1500	2000	159250	39
	45.28	80020	69360	62240	57670	52020	49740	47590	1500	2000	154640	39
	53.07	62160	53890	48340	46200	41720	39910	38170	1500	2000	126180	39
	71.86	62160	53890	48340	46200	41720	39910	38170	1500	2000	126180	39
	86.23	62160	53890	48340	46200	41720	39910	38170	1500	2000	126180	39
	106.14	48930	42470	38980	37320	33630	32260	30870	1500	2000	102970	39
	122.64	62160	53890	48340	46200	41720	39910	38170	1500	2000	126180	39
	150.96	48930	42470	38980	37320	33630	32260	30870	1500	2000	102970	39
	176.30	62160	53890	48340	46200	41720	39910	38170	1500	2000	126180	39
	217.01	48930	42470	38980	37320	33630	32260	30870	1500	2000	102970	39
C3E	127.17	79980	69200	62550	59630	54090	51760	49430	1500	2000	159250	29
	152.32	80020	69360	62240	57670	52020	49740	47590	1500	2000	154640	29
	174.35	80020	69360	62240	57670	52020	49740	47590	1500	2000	154640	29
	208.84	80020	69360	62240	57670	52020	49740	47590	1500	2000	154640	29
	234.23	80020	69360	62240	57670	52020	49740	47590	1500	2000	154640	29
	299.62	80020	69360	62240	57670	52020	49740	47590	1500	2000	154640	29
	335.30	80020	69360	62240	57670	52020	49740	47590	1500	2000	154640	29
	434.32	80020	69360	62240	57670	52020	49740	47590	1500	2000	154640	29
	481.05	80020	69360	62240	57670	52020	49740	47590	1500	2000	154640	29
	561.94	80020	69360	62240	57670	52020	49740	47590	1500	2000	154640	29
	693.75	80020	69360	62240	57670	52020	49740	47590	1500	2000	154640	29
	898.64	80020	69360	62240	57670	52020	49740	47590	1500	2000	154640	29
	1053.23	62160	53890	48340	46200	41720	39910	38170	1500	2000	126180	29
	1263.87	62160	53890	48340	46200	41720	39910	38170	1500	2000	126180	29
	1555.73	48930	42470	38980	37320	33630	32260	30870	1500	2000	102970	29
C4E	481.18	80020	69360	62240	57670	52020	49740	47590	1500	2000	154640	22
	593.89	80020	69360	62240	57670	52020	49740	47590	1500	2000	154640	22
	679.80	80020	69360	62240	57670	52020	49740	47590	1500	2000	154640	22
	827.01	80020	69360	62240	57670	52020	49740	47590	1500	2000	154640	22
	937.83	80020	69360	62240	57670	52020	49740	47590	1500	2000	154640	22
	1157.81	80020	69360	62240	57670	52020	49740	47590	1500	2000	154640	22
	1388.76	80020	69360	62240	57670	52020	49740	47590	1500	2000	154640	22
	1500.86	80020	69360	62240	57670	52020	49740	47590	1500	2000	154640	22
	1800.24	80020	69360	62240	57670	52020	49740	47590	1500	2000	154640	22
	2016.27	80020	69360	62240	57670	52020	49740	47590	1500	2000	154640	22
	2337.88	80020	69360	62240	57670	52020	49740	47590	1500	2000	154640	22
	3139.44	80020	69360	62240	57670	52020	49740	47590	1500	2000	154640	22
	3460.59	80020	69360	62240	57670	52020	49740	47590	1500	2000	154640	22
	3934.32	80020	69360	62240	57670	52020	49740	47590	1500	2000	154640	22
	5283.24	80020	69360	62240	57670	52020	49740	47590	1500	2000	154640	22

510C2Z

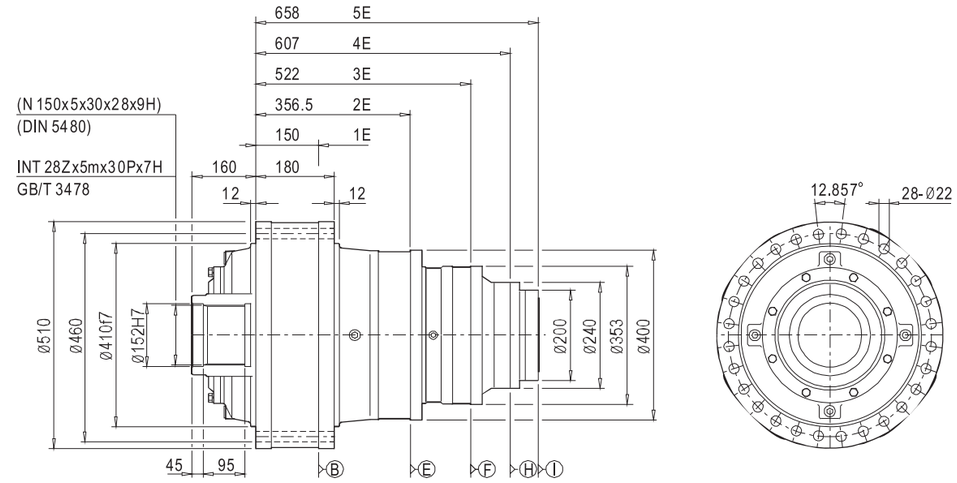



510C2H
511C2H

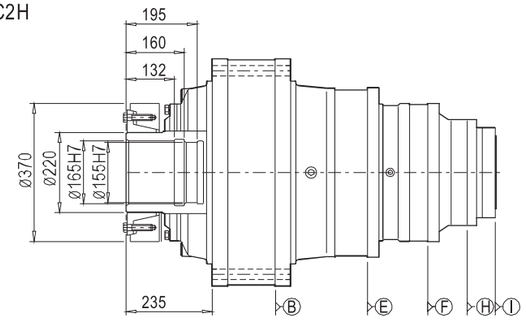

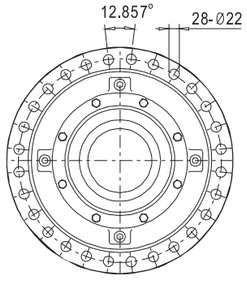

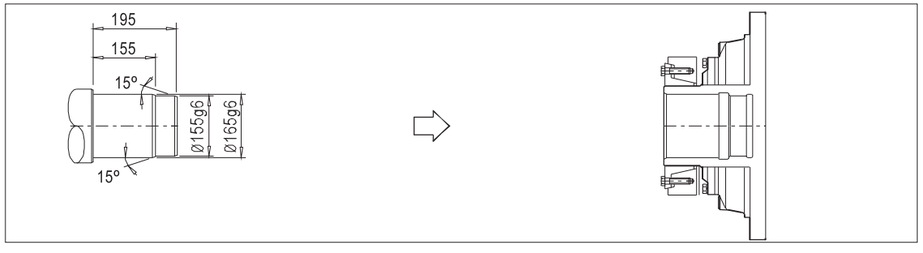

510C2C

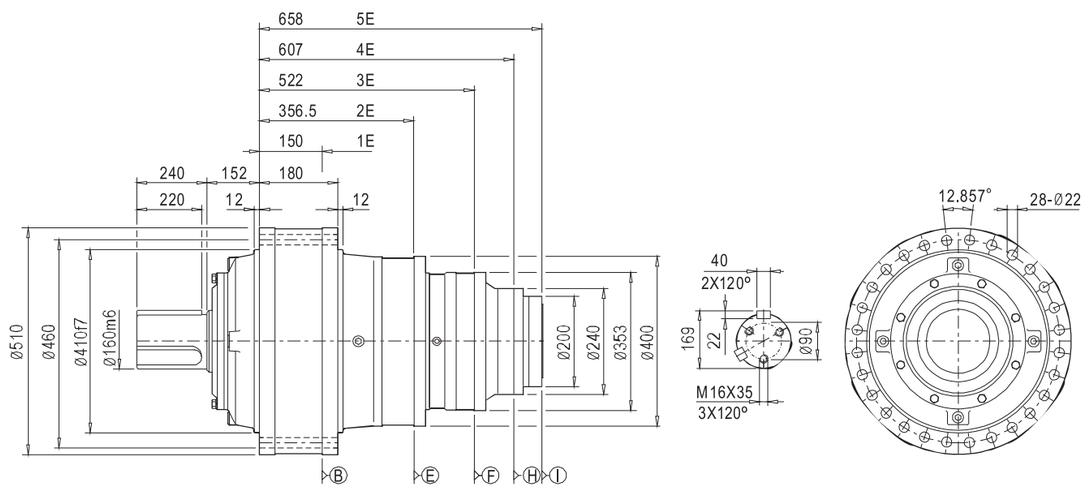

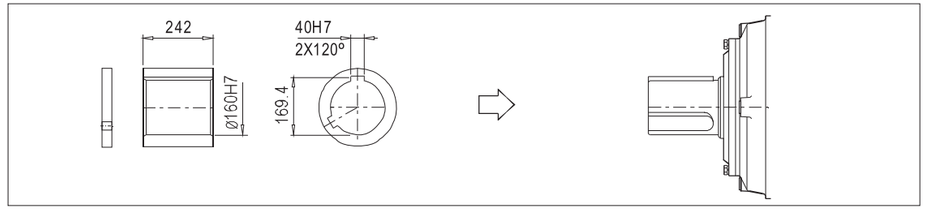

510C2S
511C2S

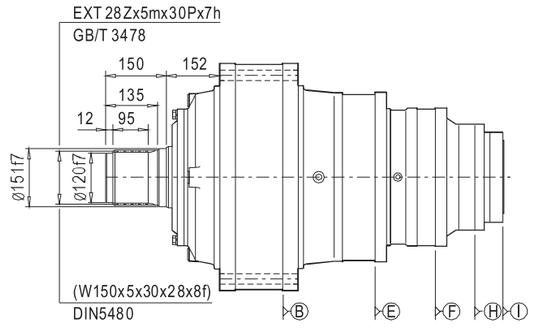

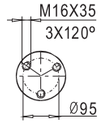

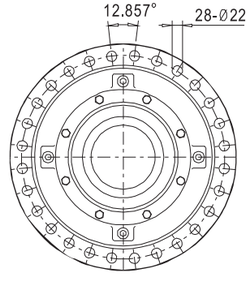

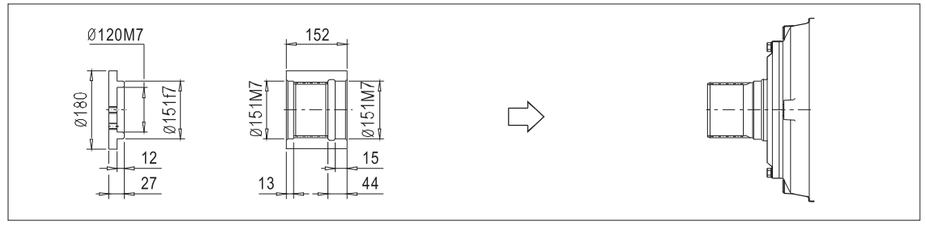

510R2Z(H)

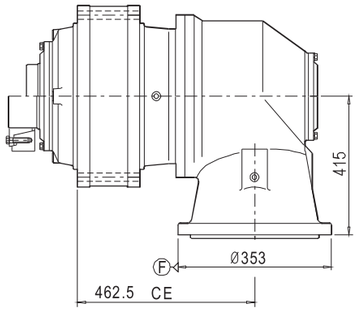

510R2C(S)

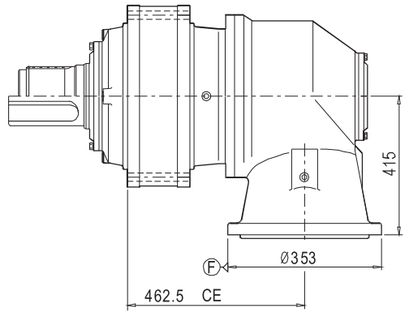

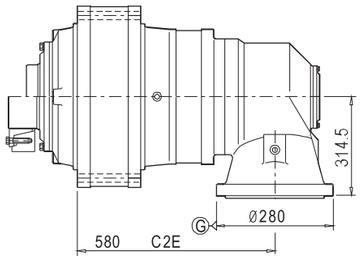

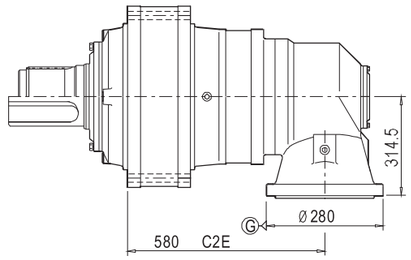

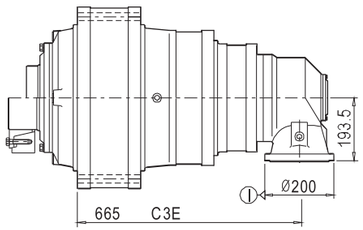

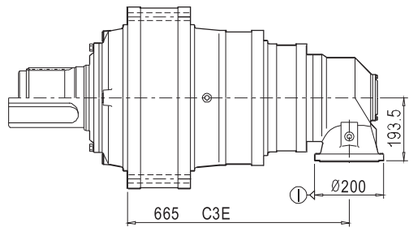

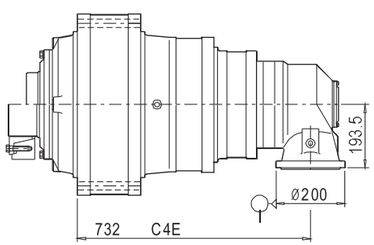

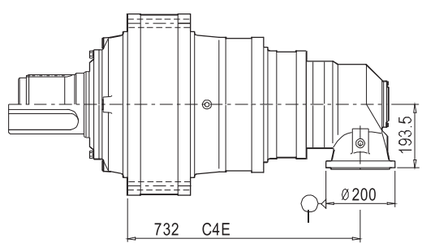

CHBNS 传承之道 稳行致远
THE WAY OF INHERITANCE IS STEADY AND FAR-REAGLIWING
传动装置专业制造商
PROFESSIONAL MANUFACTURER OF TRANSMISSION DEVICE
N series 系列

542	i	T2 [N.m] n2xh [r/minxh] 10000	25000	50000	100000	500000	1000000	2000000	n1 [r/min]	n1max [r/min]	T2max [N.m]	Pt [kW]
1E	3.86	93380	80810	72400	67520	60810	58110	55520	500	750	180320	70
	4.33	93410	80930	72580	67990	61300	58630	56060	500	750	184070	70
	5	80960	70190	62970	60040	54180	51840	49590	500	750	163700	70
	6	61460	53310	48680	46580	42070	40250	38510	500	750	128390	70
2E	14.01	93380	80810	72400	67520	60810	58110	55520	1200	1500	180320	56
	15.44	93380	80810	72400	67520	60810	58110	55520	1200	1500	180320	56
	17.37	93380	80810	72400	67520	60810	58110	55520	1200	1500	180320	56
	20.07	93380	80810	72400	67520	60810	58110	55520	1200	1500	180320	56
	27.06	93410	80930	72580	67990	61300	58630	56060	1200	1500	184070	56
	31.25	80960	70190	62970	60040	54180	51840	49590	1200	1500	163700	56
	37.50	61460	53310	48680	46580	42070	40250	38510	1200	1500	128390	56
3E	44.56	93380	80810	72400	67520	60810	58110	55520	1500	2000	180320	38
	51.00	93380	80810	72400	67520	60810	58110	55520	1500	2000	180320	38
	61.09	93380	80810	72400	67520	60810	58110	55520	1500	2000	180320	38
	68.52	93380	80810	72400	67520	60810	58110	55520	1500	2000	180320	38
	79.45	93380	80810	72400	67520	60810	58110	55520	1500	2000	180320	38
	98.24	93410	80930	72580	67990	61300	58630	56060	1500	2000	184070	38
	121.78	93410	80930	72580	67990	61300	58630	56060	1500	2000	184070	38
	141.63	93410	80930	72580	67990	61300	58630	56060	1500	2000	184070	38
	169.14	93410	80930	72580	67990	61300	58630	56060	1500	2000	184070	38
	189.44	93410	80930	72580	67990	61300	58630	56060	1500	2000	184070	38
	218.75	80960	70190	62970	60040	54180	51840	49590	1500	2000	163700	38
4E	200.51	93380	80810	72400	67520	60810	58110	55520	1500	2000	180320	26
	251.75	93380	80810	72400	67520	60810	58110	55520	1500	2000	180320	26
	288.17	93380	80810	72400	67520	60810	58110	55520	1500	2000	180320	26
	345.17	93380	80810	72400	67520	60810	58110	55520	1500	2000	180320	26
	404.54	93380	80810	72400	67520	60810	58110	55520	1500	2000	180320	26
	500.05	93410	80930	72580	67990	61300	58630	56060	1500	2000	184070	26
	622.08	93410	80930	72580	67990	61300	58630	56060	1500	2000	184070	26
	689.25	93410	80930	72580	67990	61300	58630	56060	1500	2000	184070	26
	799.19	93410	80930	72580	67990	61300	58630	56060	1500	2000	184070	26
	1036.65	93410	80930	72580	67990	61300	58630	56060	1500	2000	184070	26
	1222.66	80960	70190	62970	60040	54180	51840	49590	1500	2000	163700	26
	1585.94	80960	70190	62970	60040	54180	51840	49590	1500	2000	163700	26
	1903.13	61460	53310	48680	46580	42070	40250	38510	1500	2000	128390	26
5E	2055.22	93410	80930	72580	67990	61300	58630	56060	1500	2000	184070	22
	2500.27	93410	80930	72580	67990	61300	58630	56060	1500	2000	184070	22
	3125.34	93410	80930	72580	67990	61300	58630	56060	1500	2000	184070	22
	3500.38	93410	80930	72580	67990	61300	58630	56060	1500	2000	184070	22
	4327.92	93410	80930	72580	67990	61300	58630	56060	1500	2000	184070	22
	4969.35	93410	80930	72580	67990	61300	58630	56060	1500	2000	184070	22
	6360.77	93410	80930	72580	67990	61300	58630	56060	1500	2000	184070	22

542	i	T_2 [N.m] n2xh [r/minxh] 10000	25000	50000	100000	500000	1000000	2000000	n_1 [r/min]	n_{1max} [r/min]	T_{2max} [N.m]	P_t [kW]
CE	14.33	80960	70190	62970	60040	54180	51840	49590	1500	2000	163700	68
	17.2	61460	53310	48680	46580	42070	40250	38510	1500	2000	128390	68
C2E	29.10	80310	69500	62270	58070	52300	49980	47750	1500	2000	155080	75
	32.07	88720	76770	68780	64150	57770	55210	52750	1500	2000	171310	75
	41.69	93380	80810	72400	67520	60810	58110	55520	1500	2000	180320	75
	48.85	93380	80810	72400	67520	60810	58110	55520	1500	2000	180320	75
	56.45	93380	80810	72400	67520	60810	58110	55520	1500	2000	180320	75
	76.11	93410	80930	72580	67990	61300	58630	56060	1500	2000	184070	75
	87.89	80960	70190	62970	60040	54180	51840	49590	1500	2000	163700	75
	105.47	61460	53310	48680	46580	42070	40250	38510	1500	2000	128390	75
	125.00	80960	70190	62970	60040	54180	51840	49590	1500	2000	163700	75
	150.00	61460	53310	48680	46580	42070	40250	38510	1500	2000	128390	75
	179.69	66390	57560	51640	49240	44430	42510	40670	1500	2000	134240	75
	215.63	61460	53310	48680	46580	42070	40250	38510	1500	2000	128390	75
C3E...A	105.93	93380	80810	72400	67520	60810	58110	55520	1500	2000	180320	40
	125.32	93380	80810	72400	67520	60810	58110	55520	1500	2000	180320	40
	143.45	93380	80810	72400	67520	60810	58110	55520	1500	2000	180320	40
	178.23	93380	80810	72400	67520	60810	58110	55520	1500	2000	180320	40
	204.01	93380	80810	72400	67520	60810	58110	55520	1500	2000	180320	40
	244.37	93380	80810	72400	67520	60810	58110	55520	1500	2000	180320	40
	317.79	93380	80810	72400	67520	60810	58110	55520	1500	2000	180320	40
	351.28	93380	80810	72400	67520	60810	58110	55520	1500	2000	180320	40
	393.98	93380	80810	72400	67520	60810	58110	55520	1500	2000	180320	40
	456.82	93380	80810	72400	67520	60810	58110	55520	1500	2000	180320	40
C3E...B	497.27	93410	80930	72580	67990	61300	58630	56060	1500	2000	184070	32
	578.30	93410	80930	72580	67990	61300	58630	56060	1500	2000	184070	32
	690.66	93410	80930	72580	67990	61300	58630	56060	1500	2000	184070	32
	893.23	80960	70190	62970	60040	54180	51840	49590	1500	2000	163700	32
	996.05	93410	80930	72580	67990	61300	58630	56060	1500	2000	184070	32
	1288.19	80960	70190	62970	60040	54180	51840	49590	1500	2000	163700	32
C4E	1482.53	93380	80810	72400	67520	60810	58110	55520	1500	2000	180320	22
	1696.98	93380	80810	72400	67520	60810	58110	55520	1500	2000	180320	22
	2032.65	93380	80810	72400	67520	60810	58110	55520	1500	2000	180320	22
	2382.30	93380	80810	72400	67520	60810	58110	55520	1500	2000	180320	22
	2944.76	93410	80930	72580	67990	61300	58630	56060	1500	2000	184070	22
	3663.38	93410	80930	72580	67990	61300	58630	56060	1500	2000	184070	22
	4058.89	93410	80930	72580	67990	61300	58630	56060	1500	2000	184070	22
	4706.33	93410	80930	72580	67990	61300	58630	56060	1500	2000	184070	22
	6104.69	93410	80930	72580	67990	61300	58630	56060	1500	2000	184070	22
	7200.09	80960	70190	62970	60040	54180	51840	49590	1500	2000	163700	22

CHBNS 传承之道 稳行致远
THE WAY OF INHERITANCE IS STEADY AND FAR-REACHING
传动装置专业制造商
PROFESSIONAL MANUFACTURER OF TRANSMISSION DEVICE
N series 系列

543	i	T_2 [N.m] n2xh [r/minxh] 10000	25000	50000	100000	500000	1000000	2000000	n_1 [r/min]	n_{1max} [r/min]	T_{2max} [N.m]	P_t [kW]
3E	44.56	131420	113670	103180	98640	88830	84900	81120	1500	2000	270480	38
	53.95	131420	113670	103180	98640	88830	84900	81120	1500	2000	270480	38
	61.09	131420	113670	103180	98640	88830	84900	81120	1500	2000	270480	38
	71.60	131420	113670	103180	98640	88830	84900	81120	1500	2000	270480	38
	78.90	131420	113670	103180	98640	88830	84900	81120	1500	2000	270480	38
	97.12	131420	113670	103180	98640	88830	84900	81120	1500	2000	270480	38
4E	140.36	131420	113670	103180	98640	88830	84900	81120	1500	2000	270480	26
	148.38	131420	113670	103180	98640	88830	84900	81120	1500	2000	270480	26
	183.13	131420	113670	103180	98640	88830	84900	81120	1500	2000	270480	26
	200.51	131420	113670	103180	98640	88830	84900	81120	1500	2000	270480	26
	251.75	131420	113670	103180	98640	88830	84900	81120	1500	2000	270480	26
	304.79	131420	113670	103180	98640	88830	84900	81120	1500	2000	270480	26
	345.17	131420	113670	103180	98640	88830	84900	81120	1500	2000	270480	26
	404.54	131420	113670	103180	98640	88830	84900	81120	1500	2000	270480	26
	448.22	131420	113670	103180	98640	88830	84900	81120	1500	2000	270480	26
5E	576.86	131420	113670	103180	98640	88830	84900	81120	1500	2000	270480	22
	701.78	131420	113670	103180	98640	88830	84900	81120	1500	2000	270480	22
	824.09	131420	113670	103180	98640	88830	84900	81120	1500	2000	270480	22
	1014.93	131420	113670	103180	98640	88830	84900	81120	1500	2000	270480	22
	1209.48	131420	113670	103180	98640	88830	84900	81120	1500	2000	270480	22
	1449.91	131420	113670	103180	98640	88830	84900	81120	1500	2000	270480	22
	1826.88	131420	113670	103180	98640	88830	84900	81120	1500	2000	270480	22
	2029.87	131420	113670	103180	98640	88830	84900	81120	1500	2000	270480	22
	2506.01	131420	113670	103180	98640	88830	84900	81120	1500	2000	270480	22
	3137.53	131420	113670	103180	98640	88830	84900	81120	1500	2000	270480	22
	3585.74	131420	113670	103180	98640	88830	84900	81120	1500	2000	270480	22
	4213.25	131420	113670	103180	98640	88830	84900	81120	1500	2000	270480	22
C3E...A	92.54	131420	113670	103180	98640	88830	84900	81120	1500	2000	270480	40
	126.88	131420	113670	103180	98640	88830	84900	81120	1500	2000	270480	40
	148.71	131420	113670	103180	98640	88830	84900	81120	1500	2000	270480	40
	163.87	131420	113670	103180	98640	88830	84900	81120	1500	2000	270480	40
	201.38	131420	113670	103180	98640	88830	84900	81120	1500	2000	270480	40
	244.37	131420	113670	103180	98640	88830	84900	81120	1500	2000	270480	40
	315.59	131420	113670	103180	98640	88830	84900	81120	1500	2000	270480	40
	388.47	131420	113670	103180	98640	88830	84900	81120	1500	2000	270480	40
	411.70	131420	113670	103180	98640	88830	84900	81120	1500	2000	270480	40
	453.67	131420	113670	103180	98640	88830	84900	81120	1500	2000	270480	40
	558.43	131420	113670	103180	98640	88830	84900	81120	1500	2000	270480	40
C4E	605.87	131420	113670	103180	98640	88830	84900	81120	1500	2000	270480	22
	747.79	131420	113670	103180	98640	88830	84900	81120	1500	2000	270480	22
	818.74	131420	113670	103180	98640	88830	84900	81120	1500	2000	270480	22
	1027.98	131420	113670	103180	98640	88830	84900	81120	1500	2000	270480	22
	1244.57	131420	113670	103180	98640	88830	84900	81120	1500	2000	270480	22
	1409.43	131420	113670	103180	98640	88830	84900	81120	1500	2000	270480	22
	1651.88	131420	113670	103180	98640	88830	84900	81120	1500	2000	270480	22
	1830.22	131420	113670	103180	98640	88830	84900	81120	1500	2000	270480	22
	2382.30	131420	113670	103180	98640	88830	84900	81120	1500	2000	270480	22
	2639.51	131420	113670	103180	98640	88830	84900	81120	1500	2000	270480	22

542C2Z
543C2Z

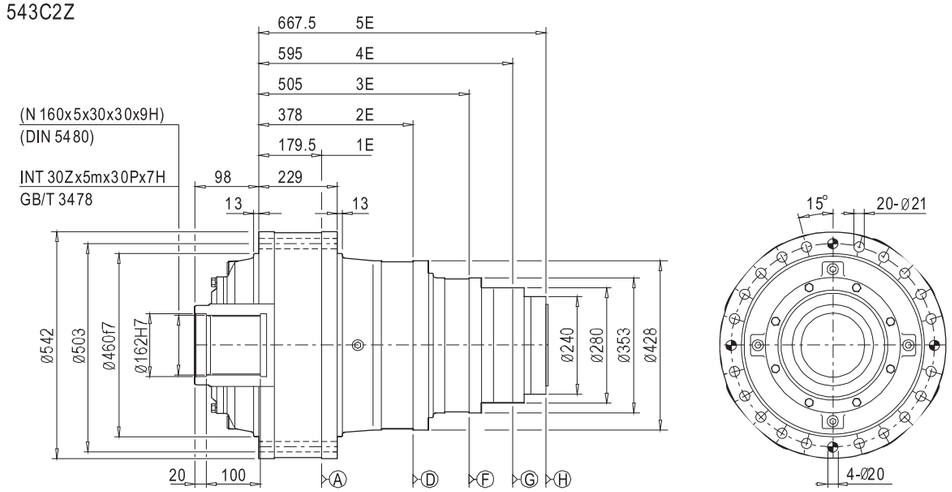

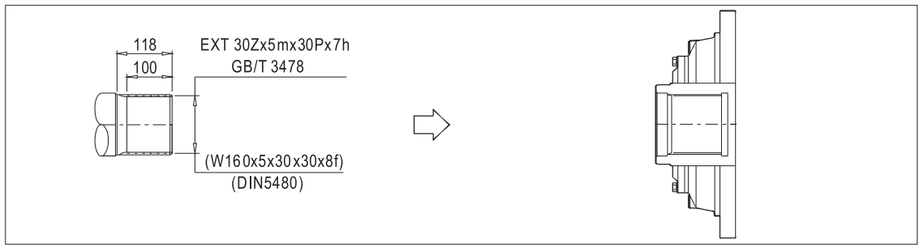

542C2H
543C2H

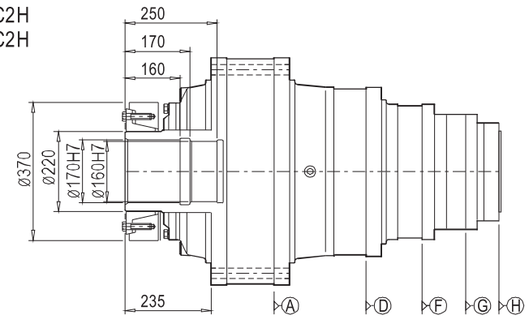

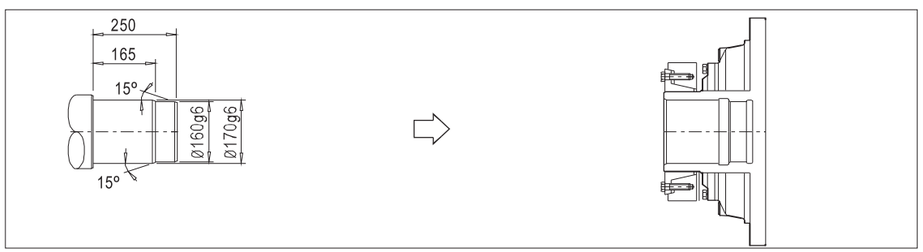

542C2C
543C2C

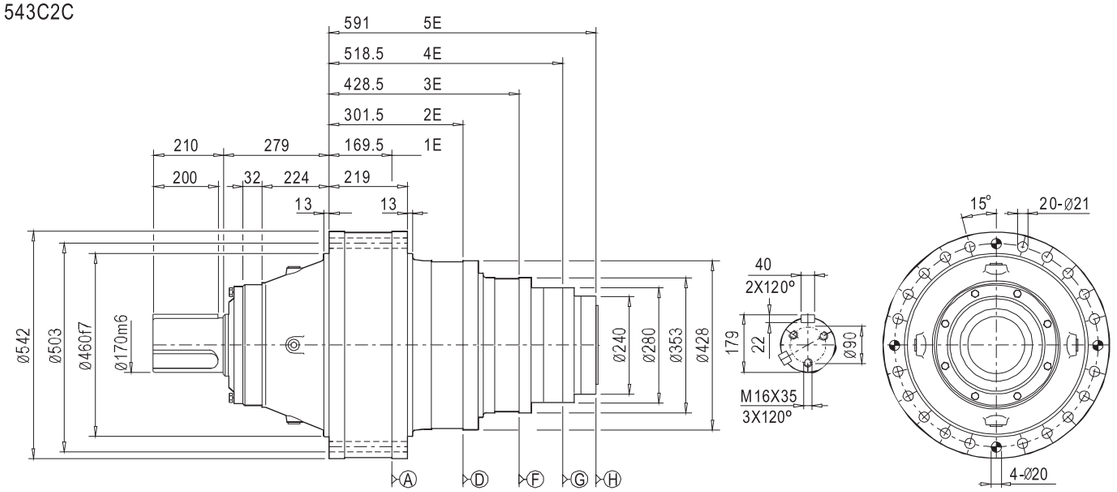

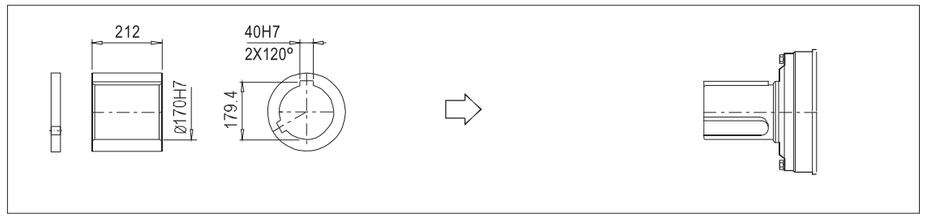

542C2S
543C2S

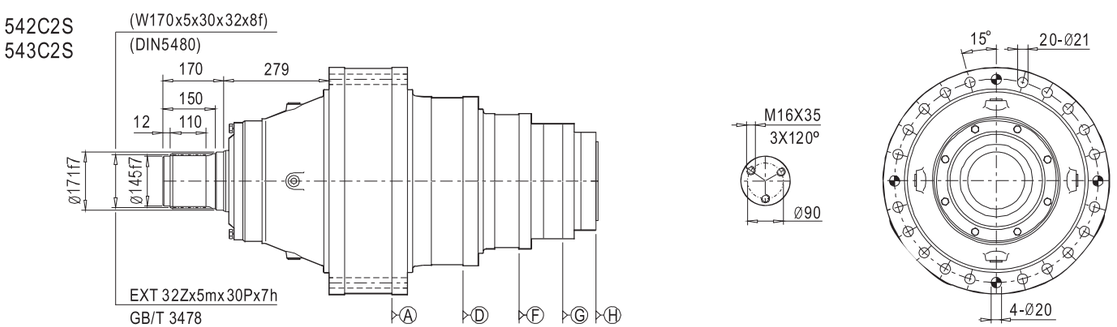



542R2Z(H)
543R2Z(H)

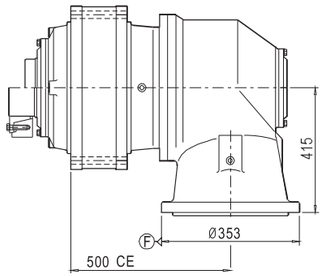

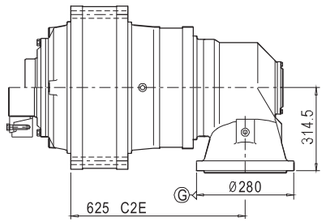

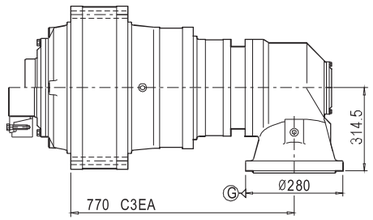

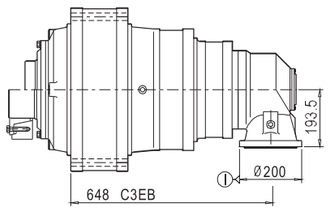

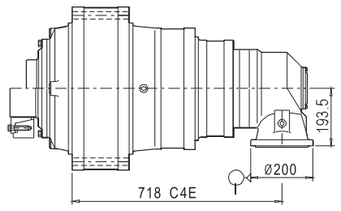

542R2C(S)
543R2C(S)

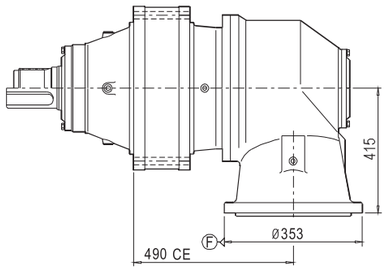

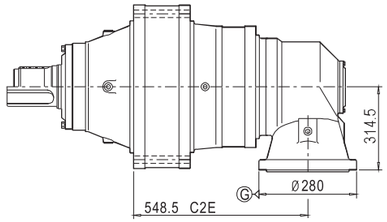

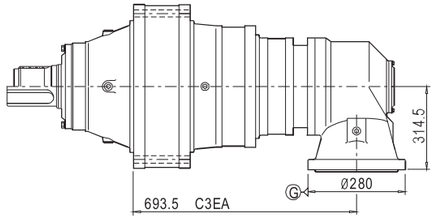

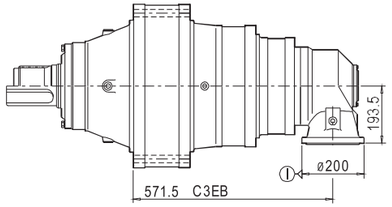

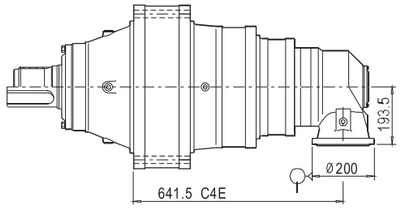

CHBNS 传承之道 稳行致远
THE WAY OF INHERITANCE IS STEADY AND FAR-REAGLIVING
传动装置专业制造商
PROFESSIONAL MANUFACTURER OF TRANSMISSION DEVICE
N series 系列

695	i	T2 [N.m] n2xh [r/minxh] 10000	25000	50000	100000	500000	1000000	2000000	n1 [r/min]	n1max [r/min]	T2max [N.m]	Pt [kW]
1E	3.22	176170	147100	131510	124560	111970	16930	102100	400	500	318500	85
	3.86	178850	154800	138690	129320	116530	111380	106470	400	500	345370	85
	4.33	180920	156780	140620	131720	11830	106920	108680	400	500	356170	85
	5	154000	133530	119810	114230	103110	98610	94360	400	500	311270	85
	6	110580	96150	87870	83810	75660	72400	69370	400	500	224650	85
2E	14.48	178850	154800	138690	129320	116530	111380	106470	800	1000	345370	60
	16.24	180920	156780	140620	131720	118300	106920	108680	800	1000	356170	60
	18.75	154000	133530	119810	114230	103110	98610	94360	1200	1500	311270	60
	20.70	154000	133530	119810	114230	103110	98610	94360	1200	1500	311270	60
	24.84	110580	96150	87870	83810	75660	72400	69370	1200	1500	224650	60
	28.02	110580	96150	87870	83810	75660	72400	69370	1200	1500	224650	60
	32.40	110580	96150	87870	83810	75660	72400	69370	1200	1500	224650	60
	39.00	110580	96150	87870	83810	75660	72400	69370	1200	1500	224650	60
3E	46.03	178850	154800	138690	129320	116530	111380	106470	1500	2000	345370	40
	55.73	178850	154800	138690	129320	116530	111380	106470	1500	2000	345370	40
	63.11	178850	154800	138690	129320	116530	111380	106470	1500	2000	345370	40
	70.80	180920	156780	140620	131720	118300	106920	108680	1500	2000	356170	40
	81.75	154000	133530	119810	114230	103110	98610	94360	1500	2000	311270	40
	95.81	154000	133530	119810	114230	103110	98610	94360	1500	2000	311270	40
	117.94	154000	133530	119810	114230	103110	98610	94360	1500	2000	311270	40
	141.26	110580	96150	87870	83810	75660	72400	69370	1500	2000	224650	40
	183.71	110580	96150	87870	83810	75660	72400	69370	1500	2000	224650	40
	202.50	110580	96150	87870	83810	75660	72400	69370	1500	2000	224650	40
	243.75	110580	96150	87870	83810	75660	72400	69370	1500	2000	224650	40
	273.00	110580	96150	87870	83810	75660	72400	69370	1500	2000	224650	40
4E	235.75	180920	156780	140620	131720	118300	106920	108680	700	900	356170	28
	318.58	180920	156780	140620	131720	118300	106920	108680	1500	2000	356170	28
	368.14	180920	156780	140620	131720	118300	106920	108680	1500	2000	356170	28
	431.16	154000	133530	119810	114230	103110	98610	94360	1500	2000	311270	28
	479.06	154000	133530	119810	114230	103110	98610	94360	1500	2000	311270	28
	599.79	154000	133530	119810	114230	103110	98610	94360	1500	2000	311270	28
	735.65	154000	133530	119810	114230	103110	98610	94360	1500	2000	311270	28
	815.07	154000	133530	119810	114230	103110	98610	94360	1500	2000	311270	28
	917.93	154000	133530	119810	114230	103110	98610	94360	1500	2000	311270	28
	1057.25	154000	133530	119810	114230	103110	98610	94360	1500	2000	311270	28
	1431.12	110580	96150	87870	83810	75660	72400	69370	1500	2000	224650	28
	1654.82	110580	96150	87870	83810	75660	72400	69370	1500	2000	224650	28
	1991.92	110580	96150	87870	83810	75660	72400	69370	1500	2000	224650	28
5E	610.41	180920	156780	140620	131720	118300	106920	108680	1500	2000	356170	25
	706.70	180920	156780	140620	131720	118300	106920	108680	1500	2000	356170	25
	859.73	180920	156780	140620	131720	118300	106920	108680	1500	2000	356170	25
	1074.66	180920	156780	140620	131720	118300	106920	108680	1500	2000	356170	25
	1309.36	180920	156780	140620	131720	118300	106920	108680	1500	2000	356170	25
	1433.61	180920	156780	140620	131720	118300	106920	108680	1500	2000	356170	25
	1806.35	180920	156780	140620	131720	118300	106920	108680	1500	2000	356170	25

695	i	T2 [N.m] n2xh [r/minxh] 10000	25000	50000	100000	500000	1000000	2000000	n1 [r/min]	n1max [r/min]	T2max [N.m]	Pt [kW]
5E	1991.12	180920	156780	140620	131720	118300	106920	108680	1500	2000	356170	25
	2548.64	180920	156780	140620	131720	118300	106920	108680	1500	2000	356170	25
	2994.65	180920	156780	140620	131720	118300	106920	108680	1500	2000	356170	25
	3460.48	180920	156780	140620	131720	118300	106920	108680	1500	2000	356170	25
	4138.53	154000	133530	119810	114230	103110	98610	94360	1500	2000	311270	25
	5297.31	154000	133530	119810	114230	103110	98610	94360	1500	2000	311270	25
	6224.34	154000	133530	119810	114230	103110	98610	94360	1500	2000	311270	25
C2E	40.28	251700	217760	197670	189020	170260	162740	155500	1500	2000	517150	80
	48.24	251700	217760	197670	189020	170260	162740	155500	1500	2000	517150	80
	63.43	180920	156780	140620	131720	118300	106920	108680	1500	2000	356170	80
	73.24	154000	133530	119810	114230	103110	98610	94360	1500	2000	311270	80
	90.16	154000	133530	119810	114230	103110	98610	94360	1500	2000	311270	80
	105.71	180920	156780	140620	131720	118300	106920	108680	1500	2000	356170	80
	122.07	154000	133530	119810	114230	103110	98610	94360	1500	2000	311270	80
	150.26	154000	133530	119810	114230	103110	98610	94360	1500	2000	311270	80
	180.31	110580	96150	87870	83810	75660	72400	69370	1500	2000	224650	80
C3E	112.64	251700	217760	197670	189020	170260	162740	155500	1500	2000	517150	45
	126.36	251700	217760	197670	189020	170260	162740	155500	1500	2000	517150	45
	145.91	251700	217760	197670	189020	170260	162740	155500	1500	2000	517150	45
	171.11	251700	217760	197670	189020	170260	162740	155500	1500	2000	517150	45
	197.58	251700	217760	197670	189020	170260	162740	155500	1500	2000	517150	45
	243.35	251700	217760	197670	189020	170260	162740	155500	1500	2000	517150	45
	284.00	251700	217760	197670	189020	170260	162740	155500	1500	2000	517150	45
	336.59	251700	217760	197670	189020	170260	162740	155500	1500	2000	517150	45
	403.91	251700	217760	197670	189020	170260	162740	155500	1500	2000	517150	45
	453.09	180920	156780	140620	131720	118300	106920	108680	1500	2000	356170	45
	531.03	180920	156780	140620	131720	118300	106920	108680	1500	2000	356170	45
	651.32	180920	156780	140620	131720	118300	106920	108680	1500	2000	356170	45
	763.36	180920	156780	140620	131720	118300	106920	108680	1500	2000	356170	45
	1085.03	154000	133530	119810	114230	103110	98610	94360	1500	2000	311270	45
C4E	514.02	251700	217760	197670	189020	170260	162740	155500	1500	2000	517150	25
	652.94	251700	217760	197670	189020	170260	162740	155500	1500	2000	517150	25
	694.62	251700	217760	197670	189020	170260	162740	155500	1500	2000	517150	25
	832.02	251700	217760	197670	189020	170260	162740	155500	1500	2000	517150	25
	1077.74	251700	217760	197670	189020	170260	162740	155500	1500	2000	517150	25
	1193.68	251700	217760	197670	189020	170260	162740	155500	1500	2000	517150	25
	1546.22	251700	217760	197670	189020	170260	162740	155500	1500	2000	517150	25
	1721.50	251700	217760	197670	189020	170260	162740	155500	1500	2000	517150	25
	2229.92	251700	217760	197670	189020	170260	162740	155500	1500	2000	517150	25
	2686.39	180920	156780	140620	131720	118300	106920	108680	1500	2000	356170	25
	3148.50	180920	156780	140620	131720	118300	106920	108680	1500	2000	356170	25
	3531.87	180920	156780	140620	131720	118300	106920	108680	1500	2000	356170	25
	4078.37	180920	156780	140620	131720	118300	106920	108680	1500	2000	356170	25
	4894.04	180920	156780	140620	131720	118300	106920	108680	1500	2000	356170	25
	6278.47	154000	133530	119810	114230	103110	98610	94360	1500	2000	311270	25
	7834.20	154000	133530	119810	114230	103110	98610	94360	1500	2000	311270	25

CHBNS 传承之道 稳行致远
THE WAY OF INHERITANCE IS STEADY AND FAR-REACHING
传动装置专业制造商
PROFESSIONAL MANUFACTURER OF TRANSMISSION DEVICE
N series 系列

695C2C

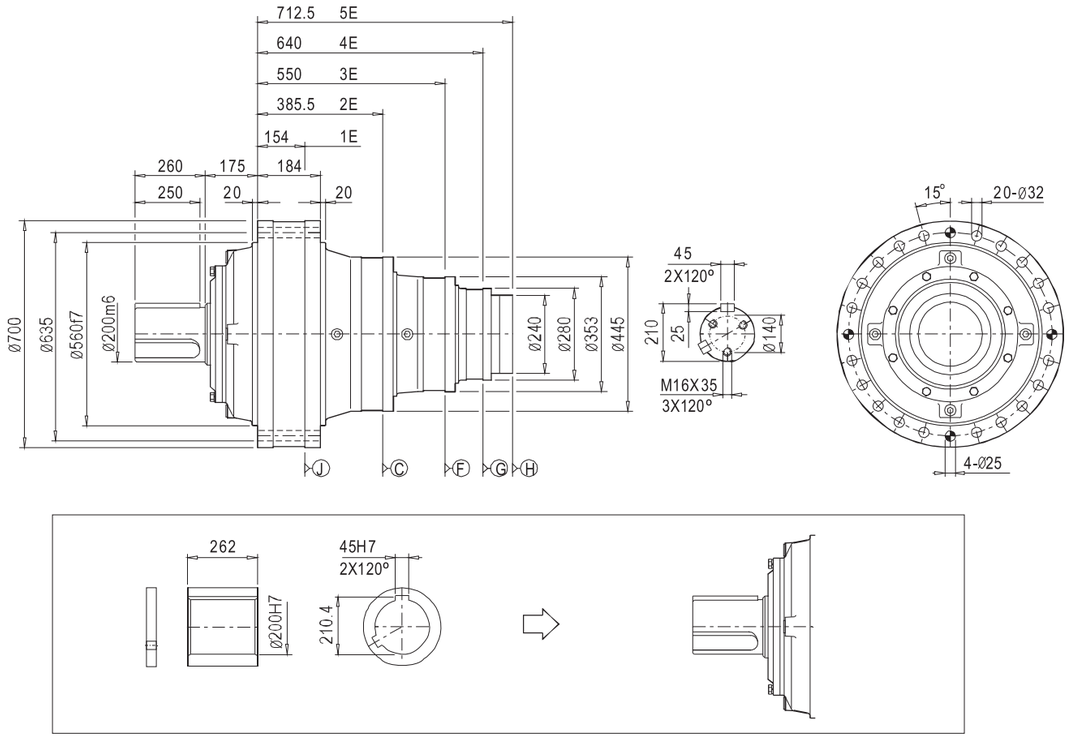

695C2S

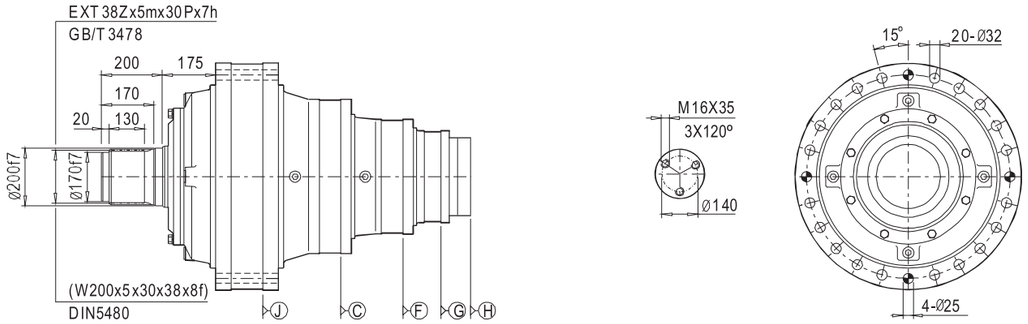

695C2Z

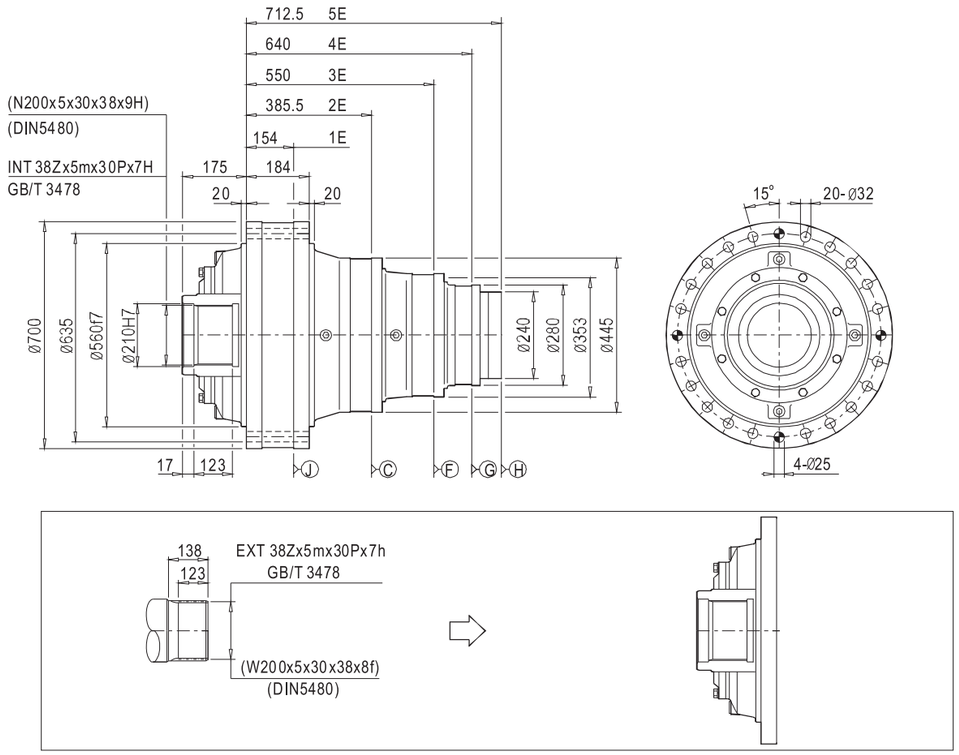

695C2H

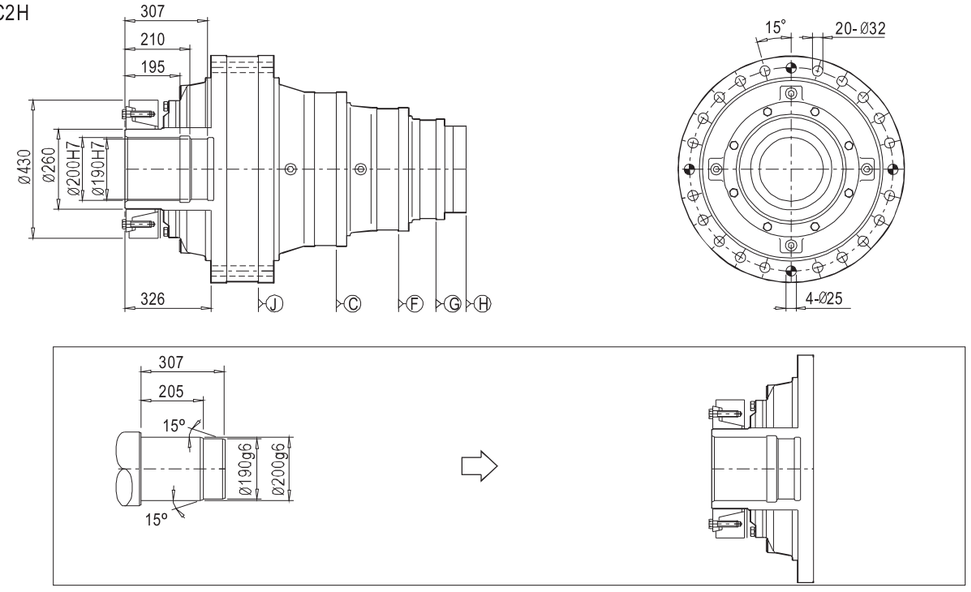

695R2CZ(H)

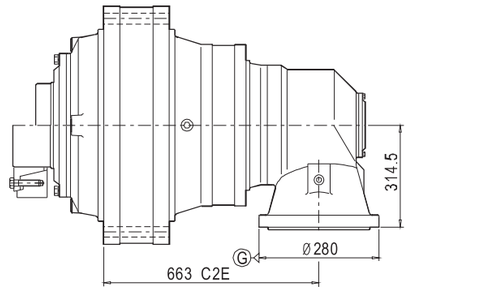

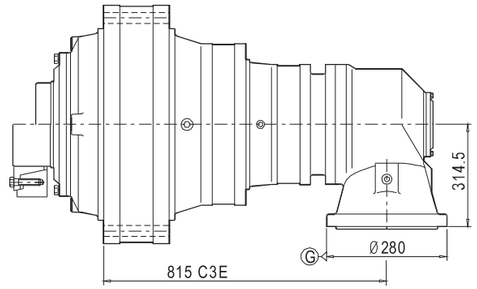

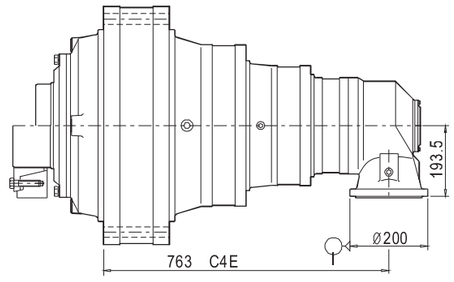

695R2C(S)

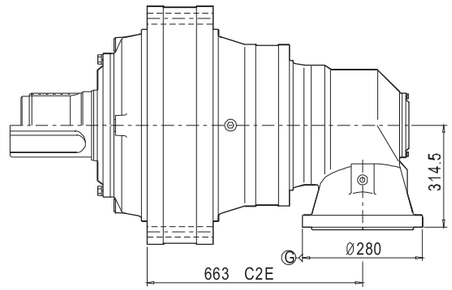

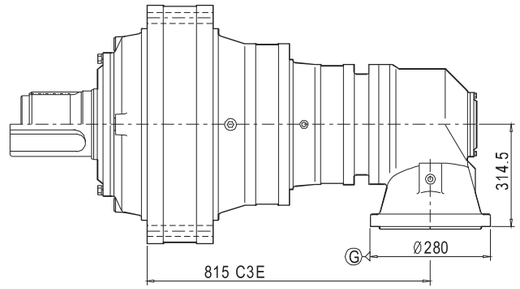

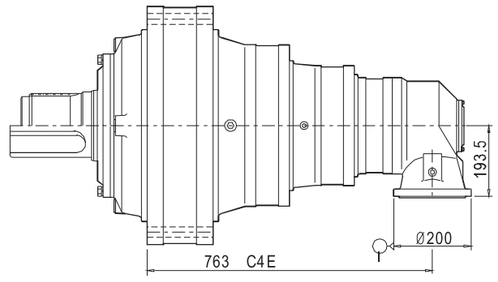

696	i	T2 [N.m] n2xh [r/minxh] 10000	25000	50000	100000	500000	1000000	2000000	n1 [r/min]	n1max [r/min]	T2max [N.m]	Pt [kW]
2E	14.05	251700	217760	197670	189020	170260	162740	155500	800	1000	517150	72
	16.83	251700	217760	197670	189020	170260	162740	155500	800	1000	517150	72
	19.72	178850	154800	138690	129320	116530	111380	106470	800	1000	345370	72
	22.13	180920	156780	140620	131720	118300	106920	108680	800	1000	356170	72
	25.55	154000	133530	119810	114230	103110	98610	94360	800	1000	311270	72
	31.45	154000	133530	119810	114230	103110	98610	94360	800	1000	311270	72
3E	54.23	251700	217760	197670	189020	170260	162740	155500	1500	2000	517150	51
	60.84	251700	217760	197670	189020	170260	162740	155500	1500	2000	517150	51
	70.25	251700	217760	197670	189020	170260	162740	155500	1500	2000	517150	51
	84.15	251700	217760	197670	189020	170260	162740	155500	1500	2000	517150	51
	100.98	251700	217760	197670	189020	170260	162740	155500	1500	2000	517150	51
	113.27	180920	156780	140620	131720	118300	106920	108680	1500	2000	356170	51
	132.76	180920	156780	140620	131720	118300	106920	108680	1500	2000	356170	51
	188.70	154000	133530	119810	114230	103110	98610	94360	1500	2000	311270	51
4E	172.47	251700	217760	197670	189020	170260	162740	155500	1500	2000	517150	40
	214.77	251700	217760	197670	189020	170260	162740	155500	1500	2000	517150	40
	265.21	251700	217760	197670	189020	170260	162740	155500	1500	2000	517150	40
	307.51	251700	217760	197670	189020	170260	162740	155500	1500	2000	517150	40
	338.97	251700	217760	197670	189020	170260	162740	155500	1500	2000	517150	40
	413.19	251700	217760	197670	189020	170260	162740	155500	1500	2000	517150	40
	482.35	180920	156780	140620	131720	118300	106920	108680	1500	2000	356170	40
	578.82	180920	156780	140620	131720	118300	106920	108680	1500	2000	356170	40
	752.74	180920	156780	140620	131720	118300	106920	108680	1500	2000	356170	40
	829.74	180920	156780	140620	131720	118300	106920	108680	1500	2000	356170	40
	929.30	180920	156780	140620	131720	118300	106920	108680	1500	2000	356170	40
	1179.38	154000	133530	119810	114230	103110	98610	94360	1500	2000	311270	40
	1585.08	110580	96150	87870	83810	75660	72400	69370	1500	2000	224650	40
5E	543.27	251700	217760	197670	189020	170260	162740	155500	1500	2000	517150	35
	612.25	251700	217760	197670	189020	170260	162740	155500	1500	2000	517150	35
	708.83	251700	217760	197670	189020	170260	162740	155500	1500	2000	517150	35
	862.33	251700	217760	197670	189020	170260	162740	155500	1500	2000	517150	35
	1073.84	251700	217760	197670	189020	170260	162740	155500	1500	2000	517150	35
	1213.44	251700	217760	197670	189020	170260	162740	155500	1500	2000	517150	35
	1514.12	251700	217760	197670	189020	170260	162740	155500	1500	2000	517150	35
	1869.71	251700	217760	197670	189020	170260	162740	155500	1500	2000	517150	35
	2167.94	251700	217760	197670	189020	170260	162740	155500	1500	2000	517150	35
	2389.71	251700	217760	197670	189020	170260	162740	155500	1500	2000	517150	35
	2912.96	251700	217760	197670	189020	170260	162740	155500	1500	2000	517150	35
	3355.06	251700	217760	197670	189020	170260	162740	155500	1500	2000	517150	35
	4080.71	180920	156780	140620	131720	118300	106920	108680	1500	2000	356170	35
	5194.15	180920	156780	140620	131720	118300	106920	108680	1500	2000	356170	35
	5817.45	180920	156780	140620	131720	118300	106920	108680	1500	2000	356170	35

CHBNS 传承之道 稳行致远
THE WAY OF INHERITANCE IS STEADY AND FAR-REACHING
传动装置专业制造商
PROFESSIONAL MANUFACTURER OF TRANSMISSION DEVICE
N series 系列

696	i	T2 [N.m] n2xh [r/minxh] 10000	25000	50000	100000	500000	1000000	2000000	n1 [r/min]	n1max [r/min]	T2max [N.m]	Pt [kW]
C2E	40.28	251700	217760	197670	189020	170260	162740	155500	1500	2000	517150	100
	48.24	251700	217760	197670	189020	170260	162740	155500	1500	2000	517150	100
	63.43	180920	156780	140620	131720	118300	106920	108680	1500	2000	356170	100
	73.24	154000	133530	119810	114230	103110	98610	94360	1500	2000	311270	100
	90.16	154000	133530	119810	114230	103110	98610	94360	1500	2000	311270	100
	105.71	180920	156780	140620	131720	118300	106920	108680	1500	2000	356170	100
	122.07	154000	133530	119810	114230	103110	98610	94360	1500	2000	311270	100
	150.26	154000	133530	119810	114230	103110	98610	94360	1500	2000	311270	100
	180.31	110580	96150	87870	83810	75660	72400	69370	1500	2000	224650	100
C3E	112.64	251700	217760	197670	189020	170260	162740	155500	1500	2000	517150	90
	126.36	251700	217760	197670	189020	170260	162740	155500	1500	2000	517150	90
	145.91	251700	217760	197670	189020	170260	162740	155500	1500	2000	517150	90
	171.11	251700	217760	197670	189020	170260	162740	155500	1500	2000	517150	90
	197.58	251700	217760	197670	189020	170260	162740	155500	1500	2000	517150	90
	243.35	251700	217760	197670	189020	170260	162740	155500	1500	2000	517150	90
	284.00	251700	217760	197670	189020	170260	162740	155500	1500	2000	517150	90
	336.59	251700	217760	197670	189020	170260	162740	155500	1500	2000	517150	90
	403.91	251700	217760	197670	189020	170260	162740	155500	1500	2000	517150	90
	453.09	180920	156780	140620	131720	118300	106920	108680	1500	2000	356170	90
	531.03	180920	156780	140620	131720	118300	106920	108680	1500	2000	356170	90
	651.32	180920	156780	140620	131720	118300	106920	108680	1500	2000	356170	90
	763.36	180920	156780	140620	131720	118300	106920	108680	1500	2000	356170	90
	1085.03	154000	133530	119810	114230	103110	98610	94360	1500	2000	311270	90
C4E	490.86	251700	217760	197670	189020	170260	162740	155500	1500	2000	517150	30
	611.27	251700	217760	197670	189020	170260	162740	155500	1500	2000	517150	30
	754.82	251700	217760	197670	189020	170260	162740	155500	1500	2000	517150	30
	875.22	251700	217760	197670	189020	170260	162740	155500	1500	2000	517150	30
	964.75	251700	217760	197670	189020	170260	162740	155500	1500	2000	517150	30
	1255.67	251700	217760	197670	189020	170260	162740	155500	1500	2000	517150	30
	1384.11	251700	217760	197670	189020	170260	162740	155500	1500	2000	517150	30
	1810.89	251700	217760	197670	189020	170260	162740	155500	1500	2000	517150	30
	1996.13	251700	217760	197670	189020	170260	162740	155500	1500	2000	517150	30
	2433.20	251700	217760	197670	189020	170260	162740	155500	1500	2000	517150	30
	2840.53	180920	156780	140620	131720	118300	106920	108680	1500	2000	356170	30
	3408.63	180920	156780	140620	131720	118300	106920	108680	1500	2000	356170	30
	4432.78	180920	156780	140620	131720	118300	106920	108680	1500	2000	356170	30
	4886.22	180920	156780	140620	131720	118300	106920	108680	1500	2000	356170	30
	5472.57	180920	156780	140620	131720	118300	106920	108680	1500	2000	356170	30
	6945.21	154000	133530	119810	114230	103110	98610	94360	1500	2000	311270	30

696C2C

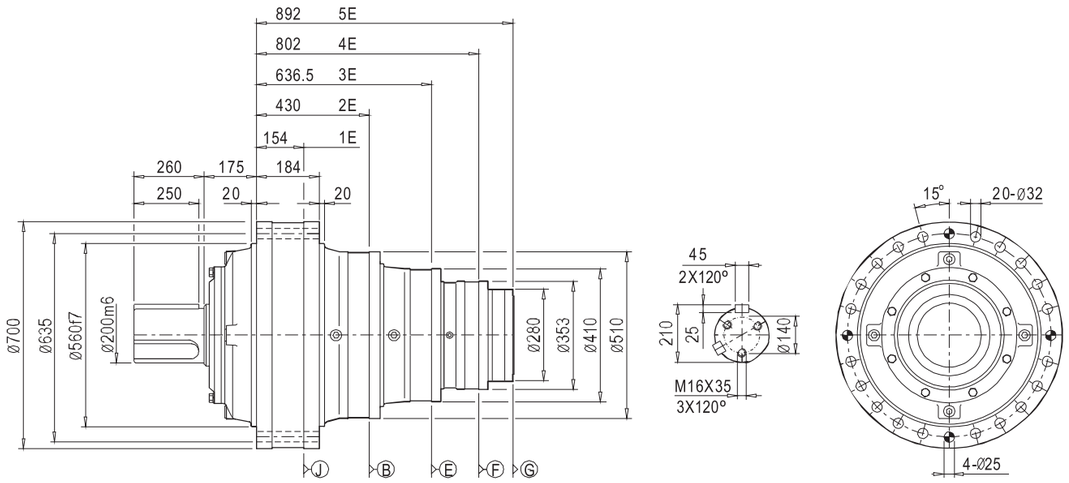

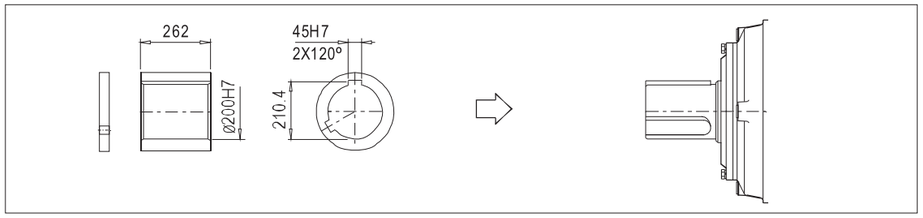

696C2S

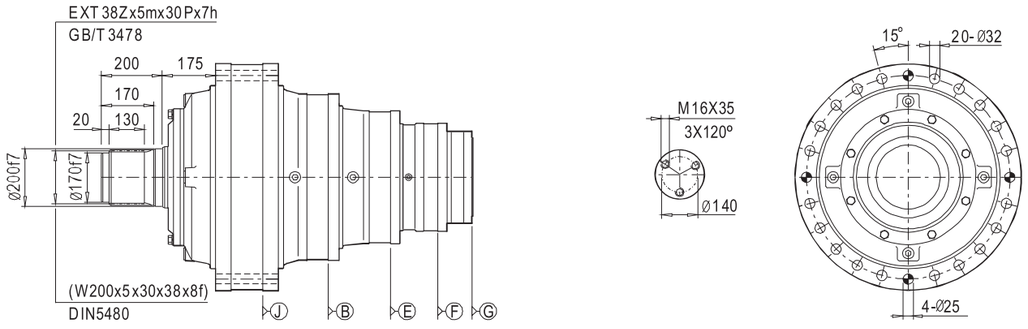

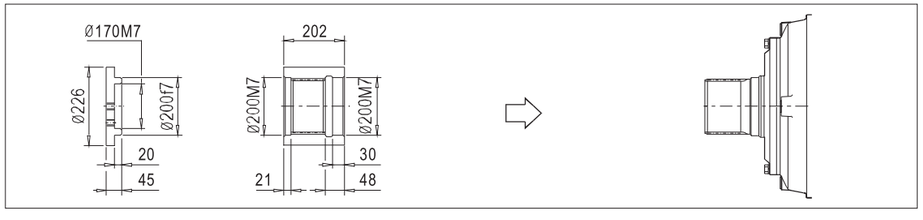

696C2Z

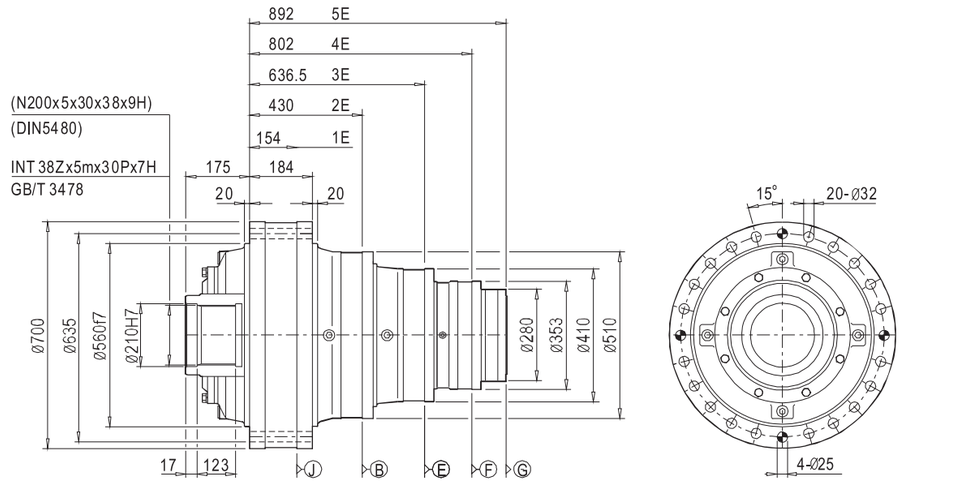

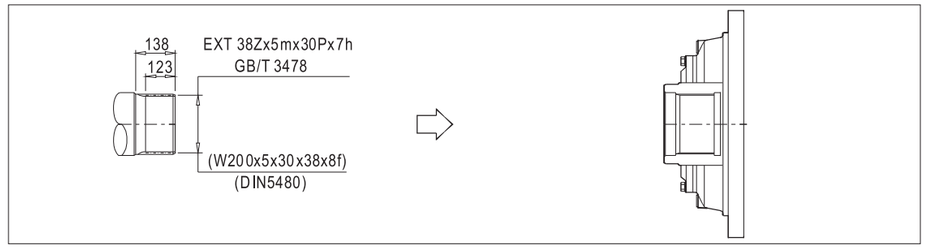

696C2H

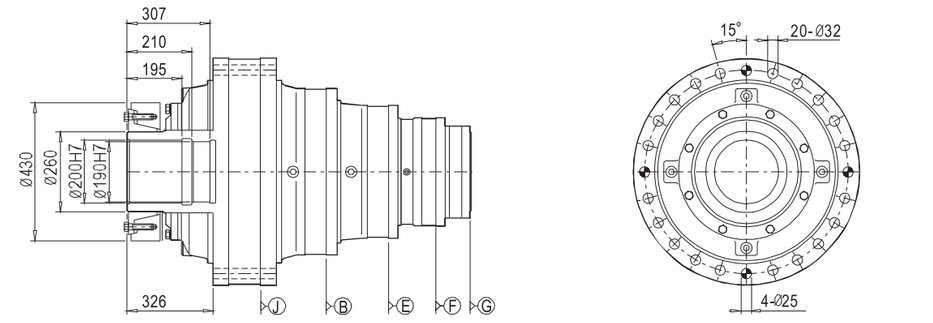

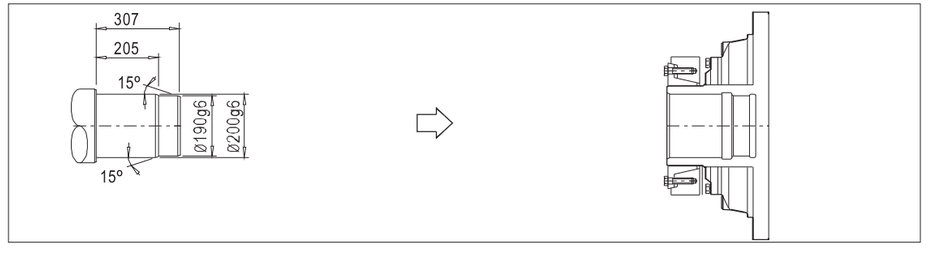

696C2CZ(H)

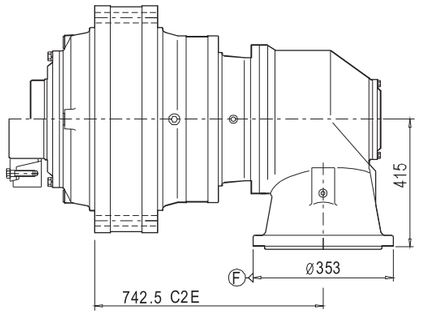

696C2C(S)

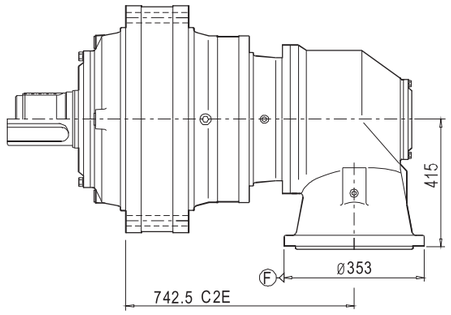

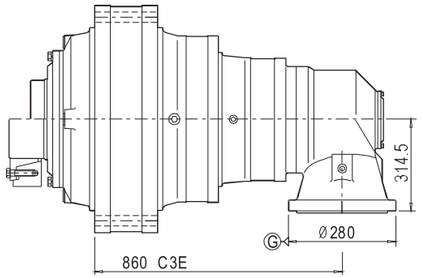

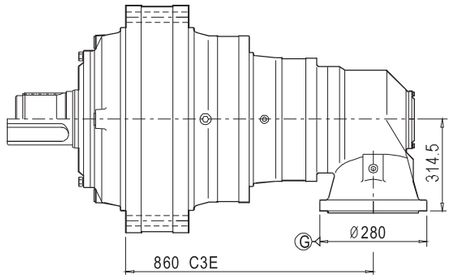

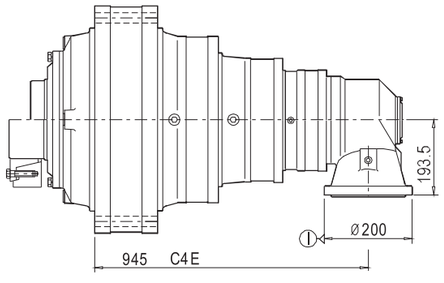

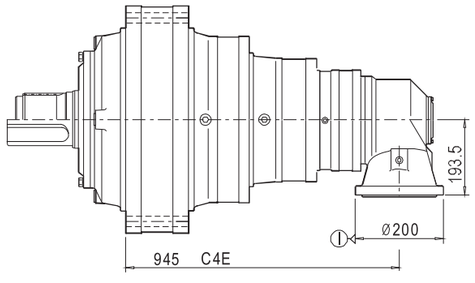

CHBNS 传承之道 稳行致远
THE WAY OF INHERITANCE IS STEADY AND FAR-REACHING
传动装置专业制造商
PROFESSIONAL MANUFACTURER OF TRANSMISSION DEVICE
N series 系列

810	i	T2 [N.m] n2xh [r/minxh] 10000	25000	50000	100000	500000	1000000	2000000	n1 [r/min]	n1max [r/min]	T2max [N.m]	Pt [kW]
1E	3.69	318060	275460	246910	231190	208400	199270	190490	300	500	606650	180
	4.18	316990	274800	246550	229080	206700	197730	189120	300	500	614790	180
	4.89	236050	205900	192130	183000	165150	156980	149850	300	500	501920	180
	6	169940	153650	147260	140840	127400	121800	116460	300	500	368840	180
2E	16.13	316990	274800	246550	229080	206700	197730	189120	500	750	614790	100
	18.10	316990	274800	246550	229080	206700	197730	189120	500	750	614790	100
	21.17	236050	205900	192130	183000	165150	156980	149850	500	750	501920	100
	24.45	236050	205900	192130	183000	165150	156980	149850	500	750	501920	100
	29.34	236050	205900	192130	183000	165150	156980	149850	500	750	501920	100
	36.00	169940	153650	147260	140840	127400	121800	116460	500	750	368840	100
3E	51.70	380550	329400	300290	287040	258850	247480	236560	1000	1200	773480	70
	56.97	380550	329400	300290	287040	258850	247480	236560	1200	1500	773480	70
	72.61	316990	274800	246550	229080	206700	197730	189120	1200	1500	614790	70
	83.90	316990	274800	246550	229080	206700	197730	189120	1200	1500	614790	70
	94.12	316990	274800	246550	229080	206700	197730	189120	1200	1500	614790	70
	132.34	236050	205900	192130	183000	165150	156980	149850	1200	1500	501920	70
	152.81	236050	205900	192130	183000	165150	156980	149850	1200	1500	501920	70
	183.38	236050	205900	192130	183000	165150	156980	149850	1200	1500	501920	70
	225.00	169940	153650	147260	140840	127400	121800	116460	1200	1500	368840	70
4E	188.20	380550	329400	300290	287040	258850	247480	236560	1500	2000	773480	50
	204.75	380550	329400	300290	287040	258850	247480	236560	1500	2000	773480	50
	252.83	380550	329400	300290	287040	258850	247480	236560	1500	2000	773480	50
	293.16	380550	329400	300290	287040	258850	247480	236560	1500	2000	773480	50
	356.09	380550	329400	300290	287040	258850	247480	236560	1500	2000	773480	50
	400.60	380550	329400	300290	287040	258850	247480	236560	1500	2000	773480	50
	462.91	380550	329400	300290	287040	258850	247480	236560	1500	2000	773480	50
	588.23	316990	274800	246550	229080	206700	197730	189120	1500	2000	614790	50
	707.01	316990	274800	246550	229080	206700	197730	189120	1500	2000	614790	50
	896.70	236050	205900	192130	183000	165150	156980	149850	1500	2000	501920	50
	1039.74	236050	205900	192130	183000	165150	156980	149850	1500	2000	501920	50
	1283.63	236050	205900	192130	183000	165150	156980	149850	1500	2000	501920	50
	1575.00	169940	153650	147260	140840	127400	121800	116460	1500	2000	368840	50
5E	739.88	380550	329400	300290	287040	258850	247480	236560	1500	2000	773480	40
	838.13	316990	274800	246550	229080	206700	197730	189120	1500	2000	614790	40
	923.56	316990	274800	246550	229080	206700	197730	189120	1500	2000	614790	40
	1178.31	316990	274800	246550	229080	206700	197730	189120	1500	2000	614790	40
	1531.81	316990	274800	246550	229080	206700	197730	189120	1500	2000	614790	40
	1891.55	316990	274800	246550	229080	206700	197730	189120	1500	2000	614790	40
	2193.27	316990	274800	246550	229080	206700	197730	189120	1500	2000	614790	40
	2417.63	316990	274800	246550	229080	206700	197730	189120	1500	2000	614790	40
	2941.15	316990	274800	246550	229080	206700	197730	189120	1500	2000	614790	40
	3323.50	316990	274800	246550	229080	206700	197730	189120	1500	2000	614790	40
	4147.03	316990	274800	246550	229080	206700	197730	189120	1500	2000	614790	40
	5066.38	236050	205900	192130	183000	165150	156980	149850	1500	2000	501920	40

810	i	T_2 [N.m] n2xh [r/minxh] 10000	25000	50000	100000	500000	1000000	2000000	n_1 [r/min]	n_{1max} [r/min]	T_{2max} [N.m]	P_t [kW]
C2E	46.25	278960	241830	216970	201600	181900	174010	166430	1500	2000	541020	100
	60.70	236050	205900	192130	183000	165150	156980	149850	1500	2000	501920	100
	70.09	236050	205900	192130	183000	165150	156980	149850	1500	2000	501920	100
	84.11	236050	205900	192130	183000	165150	156980	149850	1500	2000	501920	100
	103.20	169940	153650	147260	140840	127400	121800	116460	1500	2000	368840	100
	116.82	212450	185310	172920	164700	148640	141290	134870	1500	2000	451730	100
	140.18	236050	205900	192130	183000	165150	156980	149850	1500	2000	501920	100
	172.00	169940	153650	147260	140840	127400	121800	116460	1500	2000	368840	100
C3E	150.80	316990	274800	246550	229080	206700	197730	189120	1500	2000	614790	90
	174.26	316990	274800	246550	229080	206700	197730	189120	1500	2000	614790	90
	195.47	316990	274800	246550	229080	206700	197730	189120	1500	2000	614790	90
	235.97	316990	274800	246550	229080	206700	197730	189120	1500	2000	614790	90
	264.70	316990	274800	246550	229080	206700	197730	189120	1500	2000	614790	90
	376.47	316990	274800	246550	229080	206700	197730	189120	1500	2000	614790	90
	429.79	236050	205900	192130	183000	165150	156980	149850	1500	2000	501920	90
	515.74	236050	205900	192130	183000	165150	156980	149850	1500	2000	501920	90
	611.25	236050	205900	192130	183000	165150	156980	149850	1500	2000	501920	90
	733.50	236050	205900	192130	183000	165150	156980	149850	1500	2000	501920	90
	878.67	236050	205900	192130	183000	165150	156980	149850	1500	2000	501920	90
	1054.41	236050	205900	192130	183000	165150	156980	149850	1500	2000	501920	90
	1293.75	169940	153650	147260	140840	127400	121800	116460	1500	2000	368840	90
C4EA	529.32	380550	329400	300290	287040	258850	247480	236560	1500	2000	773480	55
	575.85	380550	329400	300290	287040	258850	247480	236560	1500	2000	773480	55
	711.09	380550	329400	300290	287040	258850	247480	236560	1500	2000	773480	55
	818.98	380550	329400	300290	287040	258850	247480	236560	1500	2000	773480	55
	1011.32	380550	329400	300290	287040	258850	247480	236560	1500	2000	773480	55
	1172.64	380550	329400	300290	287040	258850	247480	236560	1500	2000	773480	55
	1424.34	380550	329400	300290	287040	258850	247480	236560	1500	2000	773480	55
	1851.64	380550	329400	300290	287040	258850	247480	236560	1500	2000	773480	55
C4EB	2012.25	316990	274800	246550	229080	206700	197730	189120	1500	2000	614790	40
	2401.94	316990	274800	246550	229080	206700	197730	189120	1500	2000	614790	40
	2886.95	316990	274800	246550	229080	206700	197730	189120	1500	2000	614790	40
	3661.54	236050	205900	192130	183000	165150	156980	149850	1500	2000	501920	40
	4245.59	236050	205900	192130	183000	165150	156980	149850	1500	2000	501920	40
	5241.47	236050	205900	192130	183000	165150	156980	149850	1500	2000	501920	40
	6431.25	169940	153650	147260	140840	127400	121800	116460	1500	2000	368840	40

CHBNS 传承之道 稳行致远
THE WAY OF INHERITANCE IS STEADY AND FAR-REACHING
传动装置专业制造商
PROFESSIONAL MANUFACTURER OF TRANSMISSION DEVICE
N series 系列

810C2C

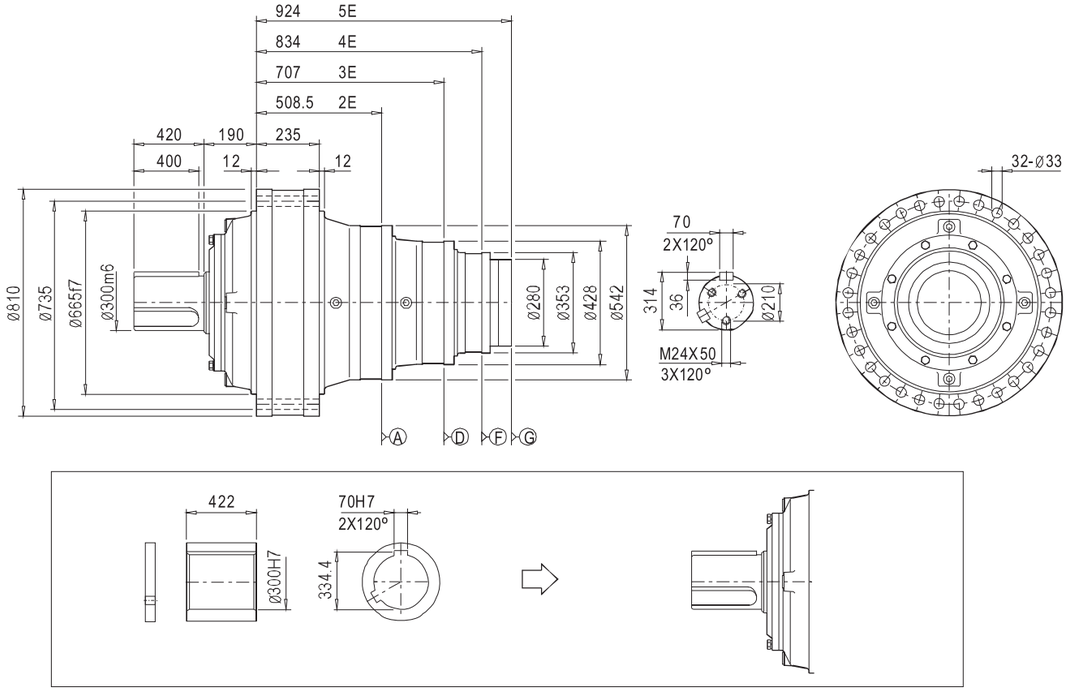

810C2S

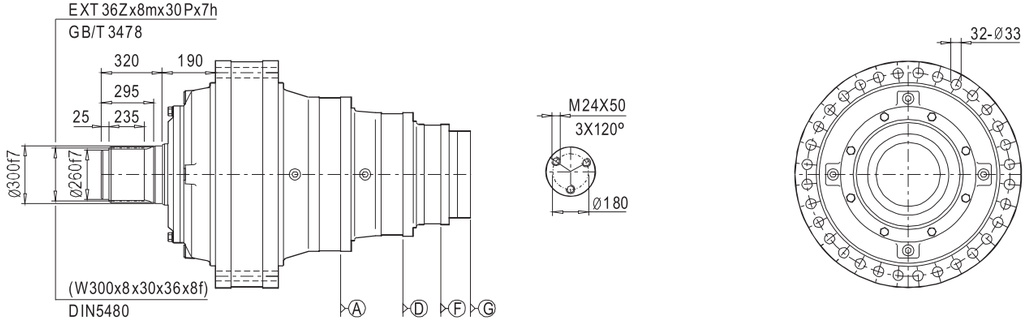

810C2Z

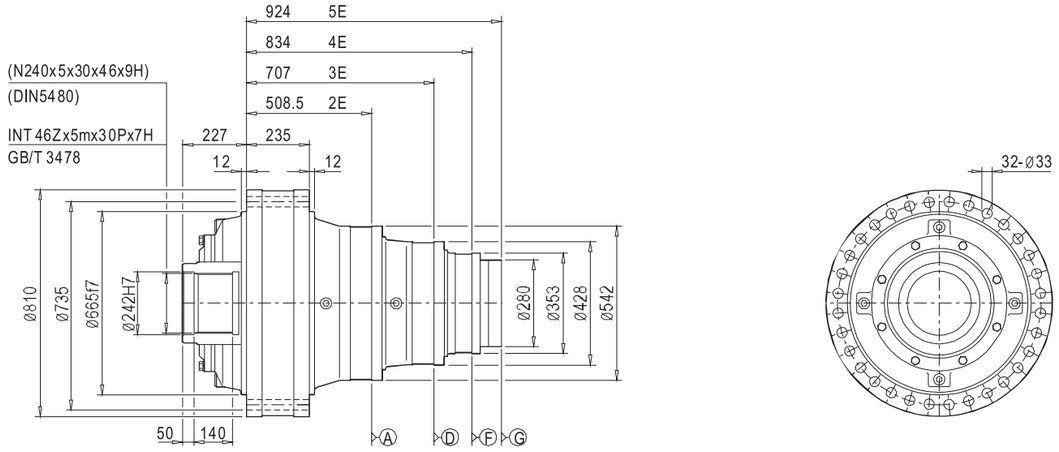

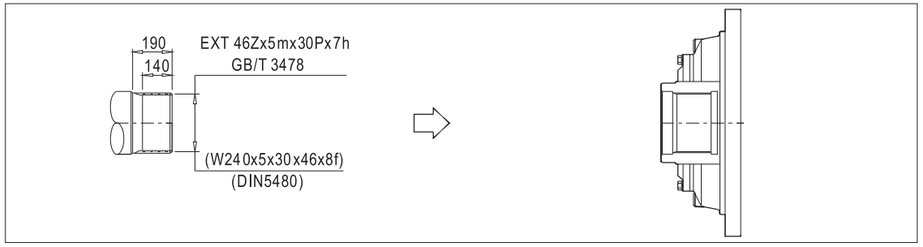

811C2H

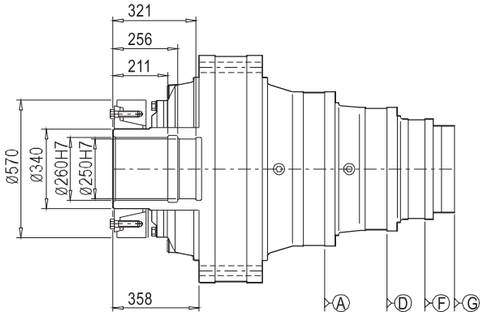

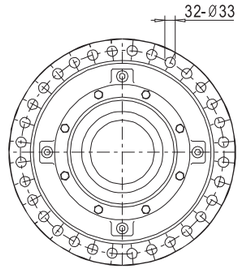

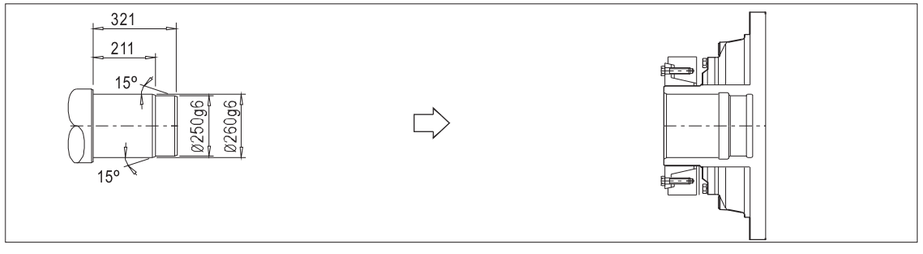

CHBNS 传承之道 稳行致远
THE WAY OF INHERITANCE IS STEADY AND FAR-REACHING
传动装置专业制造商
PROFESSIONAL MANUFACTURER OF TRANSMISSION DEVICE
N series 系列

810R2CZ(H)

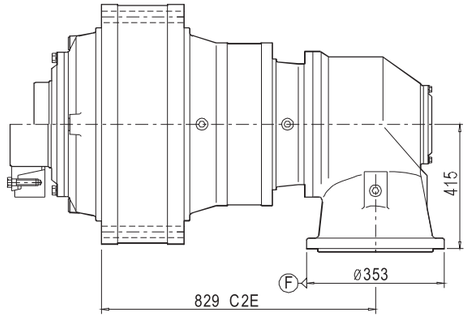

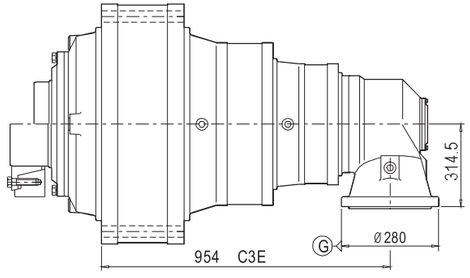

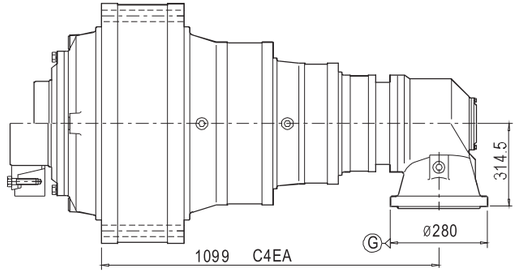

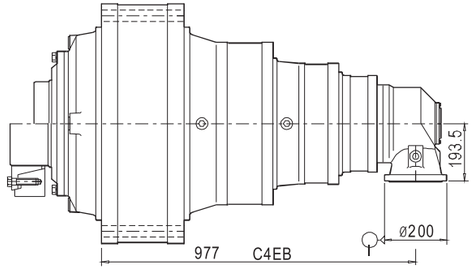

810R2C(S)

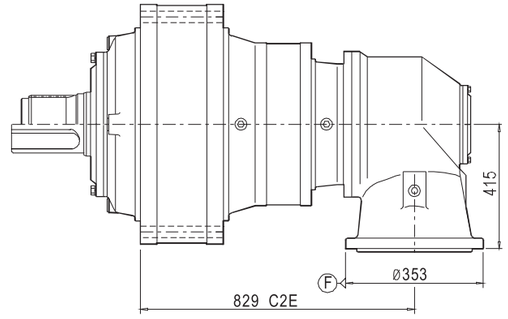

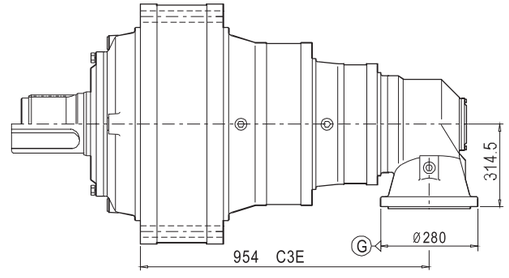

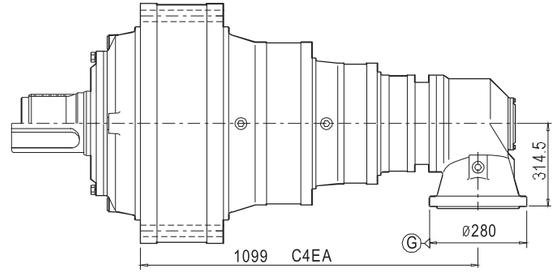

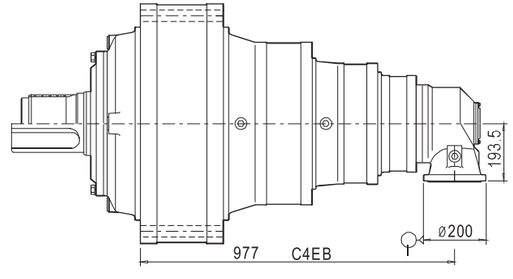

885	i	T2 [N.m] n2xh [r/minxh] 10000	25000	50000	100000	500000	1000000	2000000	n1 [r/min]	n1max [r/min]	T2max [N.m]	Pt [kW]
1E	3.69	523020	452970	406040	380260	342800	327750	313360	300	500	1152790	200
	4.18	507470	439920	394760	366800	330990	316620	302810	300	500	1017220	200
	4.89	398440	343200	324440	310780	278900	267520	256930	300	500	831600	200
	6	314610	272980	253570	242580	219250	209800	200840	300	500	674700	200
2E	14.24	523020	452970	406040	380260	342800	327750	313360	400	500	1152790	115
	18.10	507470	439920	394760	366800	330990	316620	302810	400	500	1017220	115
	20.90	507470	439920	394760	366800	330990	316620	302810	400	500	1017220	115
	24.45	398440	343200	324440	310780	278900	267520	256930	400	500	831600	115
	29.34	398440	343200	324440	310780	278900	267520	256930	400	500	831600	115
	36.00	314610	272980	253570	242580	219250	209800	200840	400	500	674700	115
3E	51.85	736280	637400	581050	555710	500920	478870	458870	800	1000	1729190	85
	62.10	736280	637400	581050	555710	500920	478870	458870	800	1000	1729190	85
	70.35	507470	439920	394760	366800	330990	316620	302810	800	1000	1017220	85
	78.91	507470	439920	394760	366800	330990	316620	302810	800	1000	1017220	85
	92.32	398440	343200	324440	310780	278900	267520	256930	800	1000	831600	85
	124.94	398440	343200	324440	310780	278900	267520	256930	800	1000	831600	85
	153.79	398440	343200	324440	310780	278900	267520	256930	800	1000	831600	85
	184.55	398440	343200	324440	310780	278900	267520	256930	800	1000	831600	85
	226.44	314610	272980	253570	242580	219250	209800	200840	800	1000	674700	85
4E	200.13	736280	637400	581050	555710	500920	478870	458870	1500	2000	1729190	66
	224.49	736280	637400	581050	555710	500920	478870	458870	1500	2000	1729190	66
	259.23	736280	637400	581050	555710	500920	478870	458870	1500	2000	1729190	66
	310.51	736280	637400	581050	555710	500920	478870	458870	1500	2000	1729190	66
	372.61	625840	541790	493900	472360	425790	407040	390040	1500	2000	1469820	66
	408.23	523020	452970	406040	380260	342800	327750	313360	1500	2000	1152790	66
	489.88	523020	452970	406040	380260	342800	327750	313360	1500	2000	1152790	66
	640.79	507470	439920	394760	366800	330990	316620	302810	1500	2000	1017220	66
	788.77	507470	439920	394760	366800	330990	316620	302810	1500	2000	1017220	66
	922.74	398440	343200	324440	310780	278900	267520	256930	1500	2000	831600	66
	1107.29	398440	343200	324440	310780	278900	267520	256930	1500	2000	831600	66
	1358.64	314610	272980	253570	242580	219250	209800	200840	1500	2000	674700	66
5E	636.40	736280	637400	581050	555710	500920	478870	458870	1500	2000	1729190	55
	728.46	736280	637400	581050	555710	500920	478870	458870	1500	2000	1729190	55
	872.55	736280	637400	581050	555710	500920	478870	458870	1500	2000	1729190	55
	978.61	736280	637400	581050	555710	500920	478870	458870	1500	2000	1729190	55
	1134.71	736280	637400	581050	555710	500920	478870	458870	1500	2000	1729190	55
	1518.37	736280	637400	581050	555710	500920	478870	458870	1500	2000	1729190	55
	1760.57	736280	637400	581050	555710	500920	478870	458870	1500	2000	1729190	55
	2173.54	736280	637400	581050	555710	500920	478870	458870	1500	2000	1729190	55
	2608.25	625840	541790	493900	472360	425790	407040	390040	1500	2000	1469820	55
	2857.61	523020	452970	406040	380260	342800	327750	313360	1500	2000	1152790	55
	3429.13	523020	452970	406040	380260	342800	327750	313360	1500	2000	1152790	55
	4485.56	507470	439920	394760	366800	330990	316620	302810	1500	2000	1017220	55
	5521.36	507470	439920	394760	366800	330990	316620	302810	1500	2000	1017220	55
	6459.20	398440	343200	324440	310780	278900	267520	256930	1500	2000	831600	55

CHBNS 传承之道 稳行致远
THE WAY OF INHERITANCE IS STEADY AND FAR-REACHING
传动装置专业制造商
PROFESSIONAL MANUFACTURER OF TRANSMISSION DEVICE
N series 系列

885	i	T2 [N.m] n2xh [r/minxh] 10000	25000	50000	100000	500000	1000000	2000000	n1 [r/min]	n1max [r/min]	T2max [N.m]	Pt [kW]
C3E...A	148.63	736280	637400	581050	555710	500920	478870	458870	1500	2000	1729190	95
	178.02	736280	637400	581050	555710	500920	478870	458870	1500	2000	1729190	95
	201.66	507470	439920	394760	366800	330990	316620	302810	1500	2000	1017220	95
	226.22	507470	439920	394760	366800	330990	316620	302810	1500	2000	1017220	95
	264.64	398440	343200	324440	310780	278900	267520	256930	1500	2000	831600	95
	358.16	398440	343200	324440	310780	278900	267520	256930	1500	2000	831600	95
	441.07	398440	343200	324440	310780	278900	267520	256930	1500	2000	831600	95
	529.04	398440	343200	324440	310780	278900	267520	256930	1500	2000	831600	95
	596.93	398440	343200	324440	310780	278900	267520	256930	1500	2000	831600	95
	734.78	398440	343200	324440	310780	278900	267520	256930	1500	2000	831600	95
	881.73	398440	343200	324440	310780	278900	267520	256930	1500	2000	831600	95
	1081.88	314610	272980	253570	242580	219250	209800	200840	1500	2000	674700	95
C3E...B	195.00	398440	343200	324440	310780	278900	267520	256930	1500	2000	831600	90
	252.28	398440	343200	324440	310780	278900	267520	256930	1500	2000	831600	90
	284.58	398440	343200	324440	310780	278900	267520	256930	1500	2000	831600	90
	341.63	398440	343200	324440	310780	278900	267520	256930	1500	2000	831600	90
	440.10	398440	343200	324440	310780	278900	267520	256930	1500	2000	831600	90
	485.87	398440	343200	324440	310780	278900	267520	256930	1500	2000	831600	90
	633.74	398440	343200	324440	310780	278900	267520	256930	1500	2000	831600	90
	672.48	314610	272980	253570	242580	219250	209800	200840	1500	2000	674700	90
	777.60	314610	272980	253570	242580	219250	209800	200840	1500	2000	674700	90
	936.00	314610	272980	253570	242580	219250	209800	200840	1500	2000	674700	90
	1117.80	314610	272980	253570	242580	219250	209800	200840	1500	2000	674700	90
	1345.50	314610	272980	253570	242580	219250	209800	200840	1500	2000	674700	90
C4E	562.85	736280	637400	581050	555710	500920	478870	458870	1500	2000	1729190	60
	631.39	736280	637400	581050	555710	500920	478870	458870	1500	2000	1729190	60
	729.08	736280	637400	581050	555710	500920	478870	458870	1500	2000	1729190	60
	873.30	736280	637400	581050	555710	500920	478870	458870	1500	2000	1729190	60
	1036.92	736280	637400	581050	555710	500920	478870	458870	1500	2000	1729190	60
	1242.02	736280	637400	581050	555710	500920	478870	458870	1500	2000	1729190	60
	1393.26	523020	452970	406040	380260	342800	327750	313360	1500	2000	1152790	60
	1632.92	523020	452970	406040	380260	342800	327750	313360	1500	2000	1152790	60
	1959.51	523020	452970	406040	380260	342800	327750	313360	1500	2000	1152790	60
	2347.32	523020	452970	406040	380260	342800	327750	313360	1500	2000	1152790	60
	2816.79	523020	452970	406040	380260	342800	327750	313360	1500	2000	1152790	60
	3684.57	507470	439920	394760	366800	330990	316620	302810	1500	2000	1017220	60
	4535.40	507470	439920	394760	366800	330990	316620	302810	1500	2000	1017220	60
	5305.77	398440	343200	324440	310780	278900	267520	256930	1500	2000	831600	60
	6366.93	398440	343200	324440	310780	278900	267520	256930	1500	2000	831600	60
	7812.18	314610	272980	253570	242580	219250	209800	200840	1500	2000	674700	60

885C2C

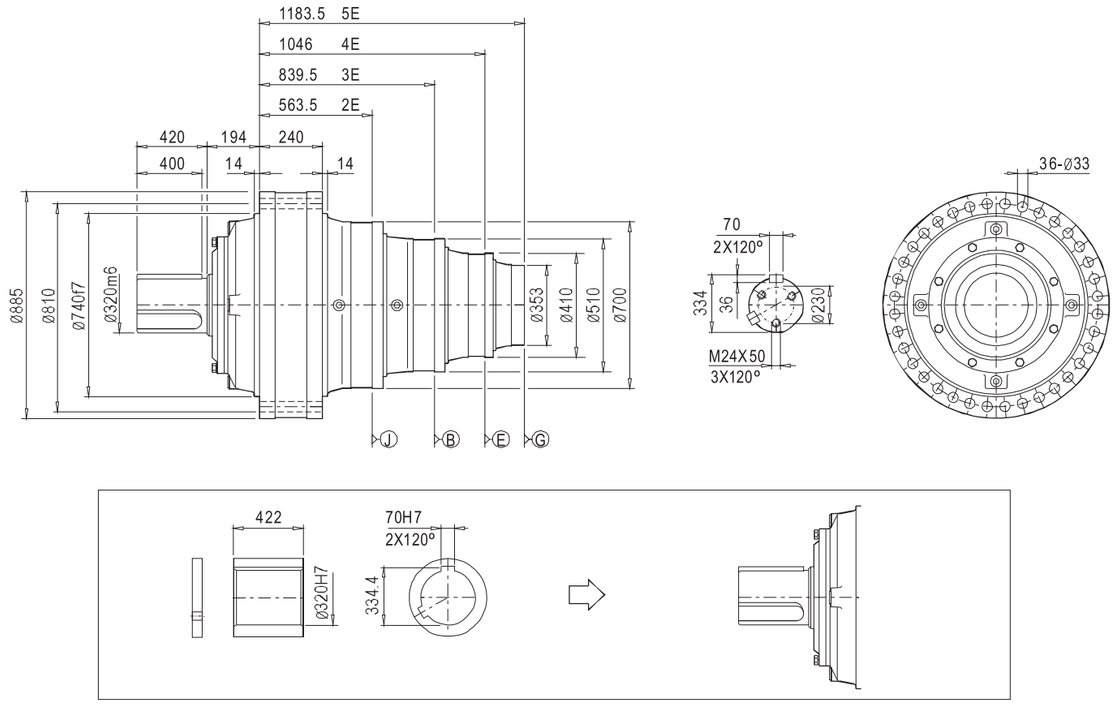

885C2S

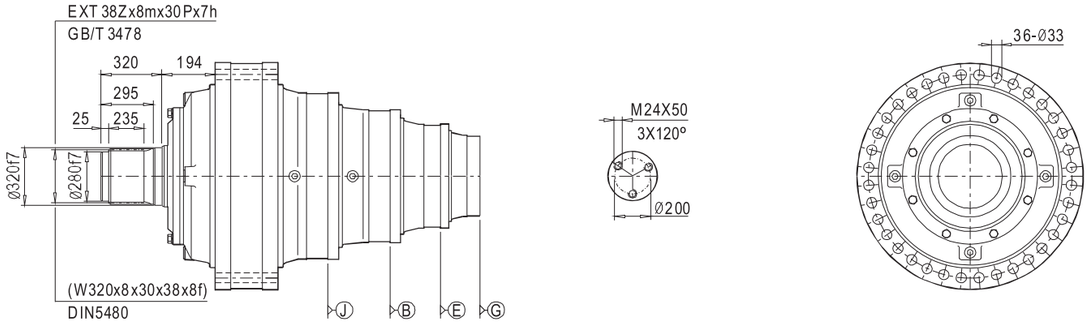

885C2Z

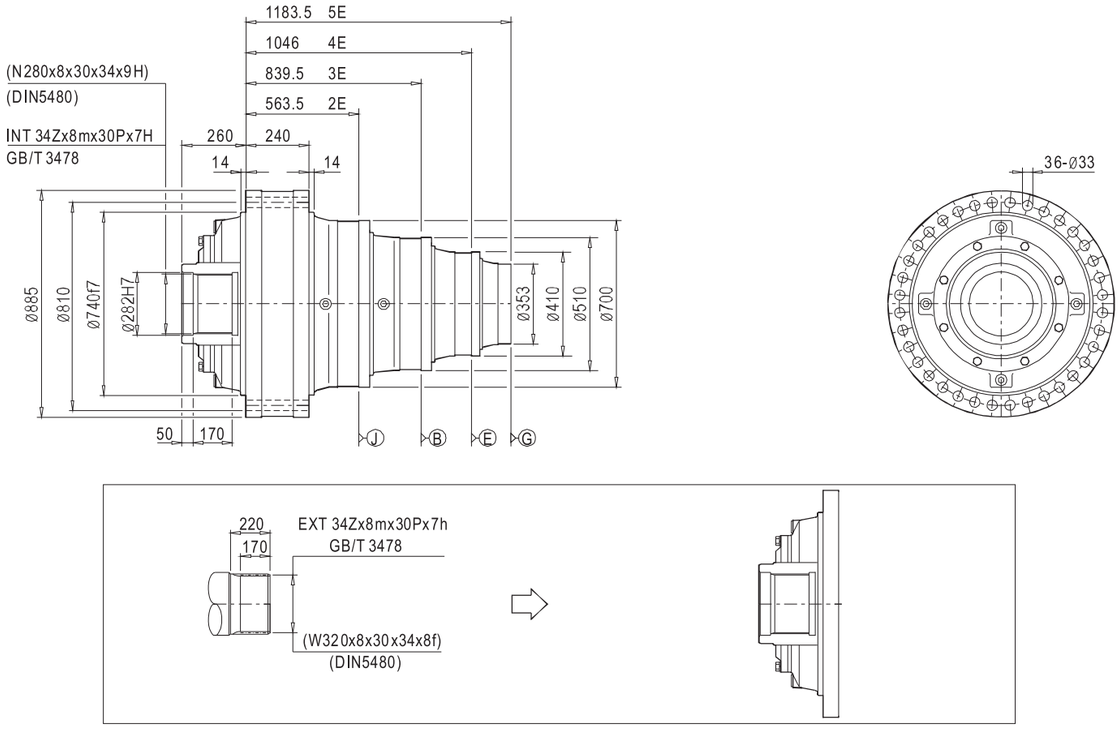

885C2H

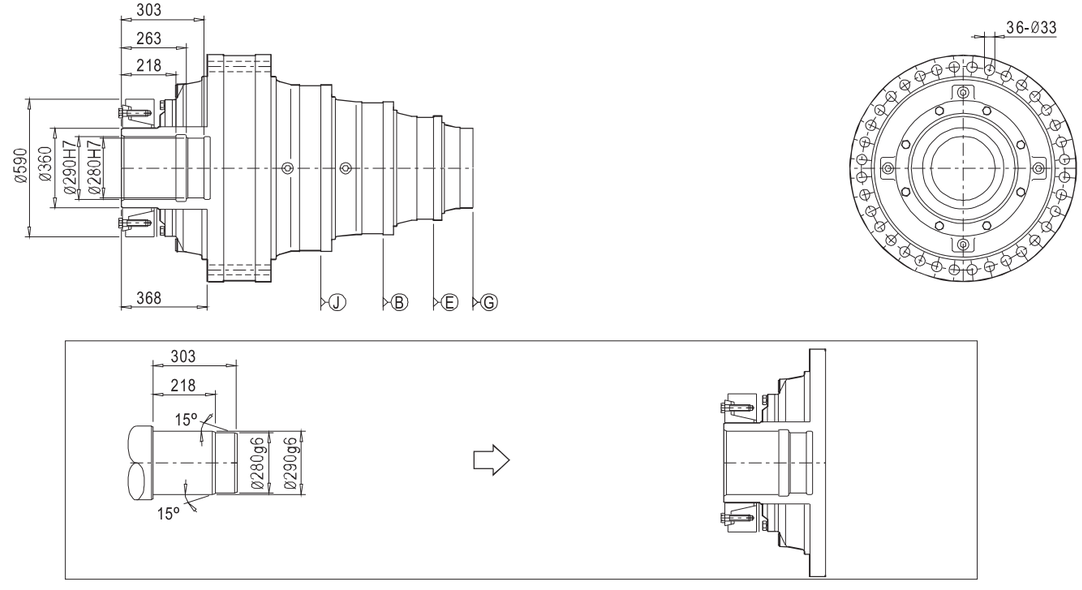

885C2Z(H)

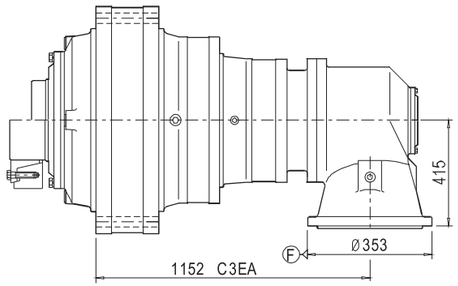

885C2C(S)

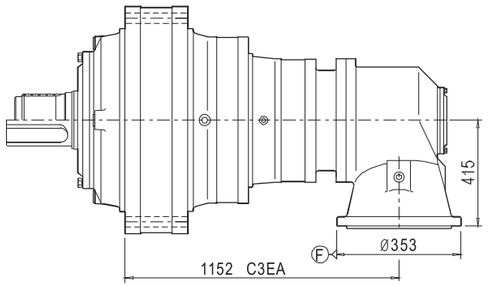

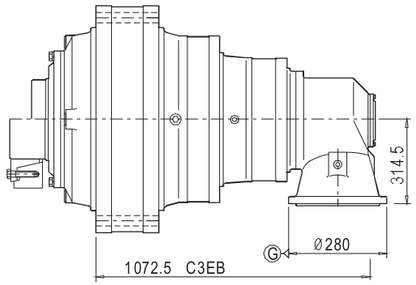

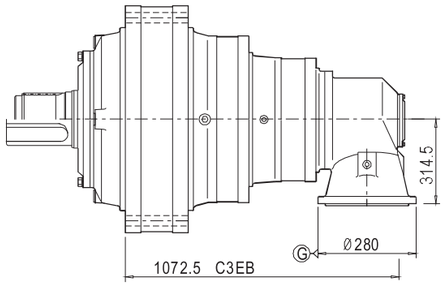

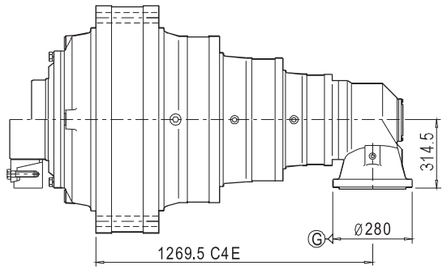

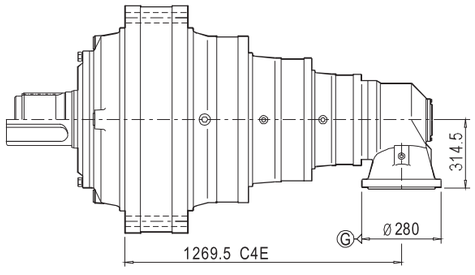

CHBNS 传承之道 稳行致远
THE WAY OF INHERITANCE IS STEADY AND FAR-REACHING
传动装置专业制造商
PROFESSIONAL MANUFACTURER OF TRANSMISSION DEVICE
N series 系列

润滑和控制

制动器和齿轮箱用同种润滑油，建议使用粘度为VG320的矿物油；

不要使用植物油；

制动器油温应低于90 ℃，否则应加强制润滑冷却，强制润滑油压

小于2bar,见下面示意图

Lubrication and Operating

Brakes share the same lubrication with the gear unit; we recommend using a hydraulic type mineral oil with an ISO VG 320 viscosity.
In all cases use either a mineral or synthetic hydraulic oil with an ISO VG 320 viscosity for the brake opening control. Do not use vegetable oils.
Lubrication oil temperature should less than 90 ℃,or force cooling needed, Oil pressure should less than 2 bar,Force cooling as following drawing

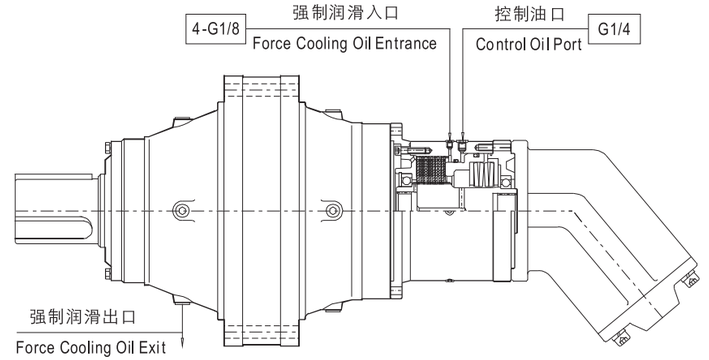

安装尺寸和技术参数

Mounting Dimensions and Technical Data

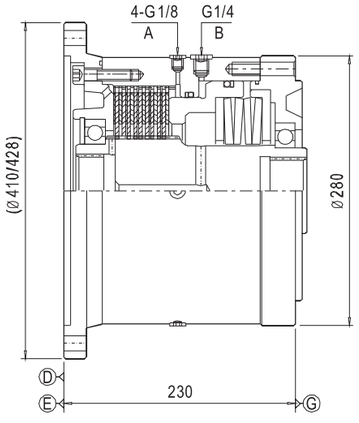

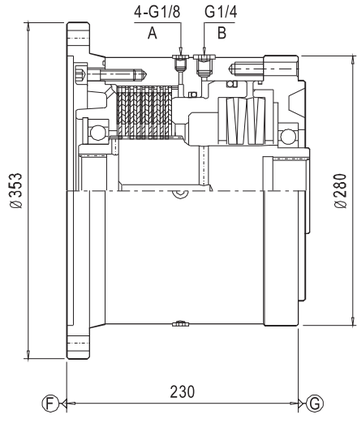

A: 泄油口/drain port

B: 压力油口/pressure port

型号 Unit size	Ts N.m	P bar	Pmax bar	Va cm^3	nmax r/min	n1 r/min	重量 Weight kg
F500	5000	60	315	100	750	600	90
F400	4000	60	315	100	750	600	90

Ts: 静态力矩/static torque
P: 释放压力/release pressure
Pmax: 最大压力/max pressure
Va: 释放控制油量/oil quantity for brake release control
nmax: 最高转速/ max speed
n1: 许用转速/available speed

安装尺寸和技术参数 Mounting Dimensions and Technical Data

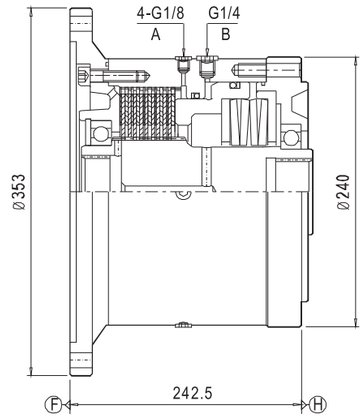

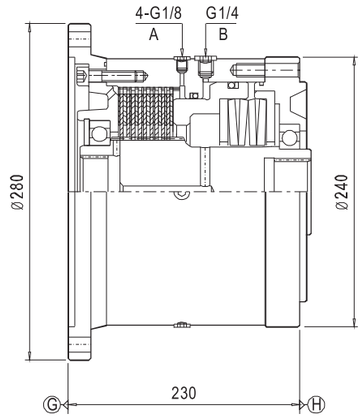

A: 泄油口/drain port

B: 压力油口/pressure port

型号 Unit size	Ts N.m	P bar	Pmax bar	Va cm^3	nmax r/min	n1 r/min	重量 Weight kg
F300	3000	45	315	71	1000	800	70
F250	2500	45	315	71	1000	800	70
F200	2000	45	315	71	1000	800	70

Ts: 静态力矩/static torque
P: 释放压力/release pressure
Pmax: 最大压力/max pressure
Va: 释放控制油量/oil quantity for brake release control
nmax: 最高转速/ max speed
n1: 许用转速/available speed

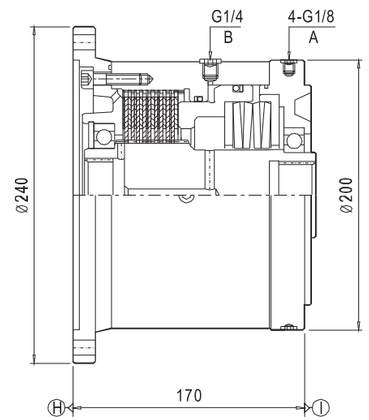

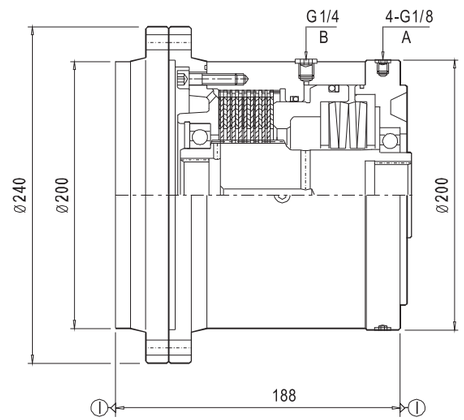

A: 泄油口/drain port

B: 压力油口/pressure port

型号 Unit size	Ts N.m	P bar	Pmax bar	Va cm^3	nmax r/min	n1 r/min	重量 Weight kg
F150	1500	40	315	35	1500	1200	55
F100	1000	30	315	35	1500	1200	55
F60	600	30	315	35	1500	1200	55

Ts: 静态力矩/static torque
P: 释放压力/release pressure
Pmax: 最大压力/max pressure
Va: 释放控制油量/oil quantity for brake release control
nmax: 最高转速/ max speed
n1: 许用转速/available speed

CHBNS 传承之道 稳行致远
THE WAY OF INHERITANCE IS STEADY AND FAR-REACHING
传动装置专业制造商
PROFESSIONAL MANUFACTURER OF TRANSMISSION DEVICE
N series 系列

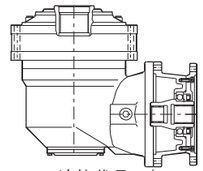

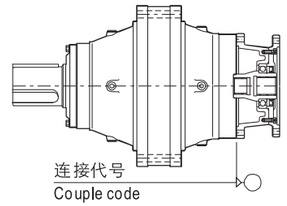

马达品牌/motor brand			SAUER DANFOSS												
马达型号/motor size			OMM Ø16	OMM 17x14 z9	OMP-OMR Ø25	OMP-OMR Ø32	OMP-OMR Ø1"	OMP-OMR Ø1 1/4"	OMP-OMR Ø1"6B	OMS 12/24 z14	OMS Ø32	OMSS 12/24 z12	OMT Ø40	OMTS 12/24 z16	OMV Ø50	OMVS 10/20 z16
定货代号/Order code																
连接尺寸及代号 Unit size & Couple code	200	Ⓘ	IM001	IM002	IM003	IM004	IM005	IM006	IM007	IM008	IM009	IM010	IM011	IM012	IM013	IM014
	240	Ⓗ	HM001	HM002	HM003	HM004	HM005	HM006	HM007	HM008	HM009	HM010	HM011	HM012	HM013	HM014
	280	Ⓖ														
	353	Ⓕ														

马达品牌/motor brand			BOSCH REXROTH												
马达型号/motor size			A2FM10-12-16 ø20	A2FM10-12-16 25x1.25x18	A2FM23-28-32 ø25	A2FM23-28-32 ø30	A2FM23-28-32 25x1.25x18	A2FM23-28-32 30x2x14	A2FM45 ø30	A2FM45 30x2x14	A2FM45 32x2x14	A2FM56 30x2x14	A2FM56 35x2x16	A2FM63 35x2x16	A2FM80 ø35	A2FM80 35x2x16
定货代号/Order code																
连接尺寸及代号 Unit size & Couple code	200	Ⓘ														
	240	Ⓗ	HM015	HM016	HM017	HM018	HM019	HM020	HM021	HM022	HM023	HM024	HM025	HM026	HM027	HM028
	280	Ⓖ	GM015	GM016	GM017	GM018	GM019	GM020	GM021	GM022	GM023	GM024	GM025	GM026	GM027	GM028
	353	Ⓕ														

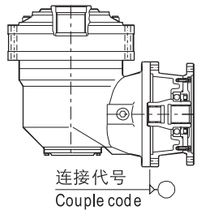

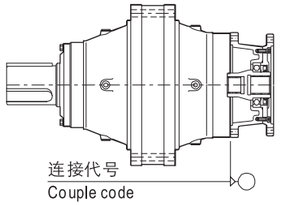

马达品牌/motor brand			BOSCH REXROTH													
马达型号/motor size			A2FM80 40x2x18	A2FM90 ø40	A2FM90 40x2x18	A2FM107-125 ø40	A2FM107-125 40x2x18	A2FM107-125 45x2x21	A2FM160 45x2x21	A2FM160 50x2x24	A2FM180 50x2x24	A2FM250 50x2x24	A6VM28 25x1.25x18	A6VM55 30x2x14	A6VM55 35x2x16	A6VM80 35x2x16
定货代号/Order code																
连接尺寸及代号 Unit size & Couple code	200	Ⓘ														
	240	Ⓗ	HM029	HM030	HM029	HM031	HM032	HM033					HM018	HM023	HM025	HM027
	280	Ⓖ	GM029	GM030	GM029	GM031	GM032	GM033	GM034	GM035	GM035	GM036	GM018	GM023	GM025	GM027
	353	Ⓕ							FM034	FM035	FM035	FM036				

马达品牌/motor brand			BOSCH REXROTH					EATON								
马达型号/motor size			A2VM107 40x2x18	A2VM160 45x2x21	A2VM160 50x2x24	A6VM200 50x2x24	A6VM250 50x2x24	SERIE 2000 12/24Z14	SERIE 2000 12/24Z14	SERIE 2000 ø1 1/4"	SERIE 2000 12/24z12	SERIE 6000 12/24z17				
定货代号/Order code																
连接尺寸及代号 Unit size & Couple code	200	Ⓘ						IM039	IM040	IM041	IM042	IM043				
	240	Ⓗ	HM032					HM039	HM040	HM041	HM042	HM043				
	280	Ⓖ	GM032	GM034	GM035											
	353	Ⓕ		FM034	FM035	FM037	FM038									

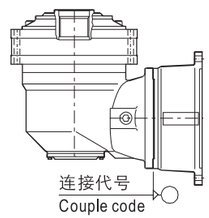

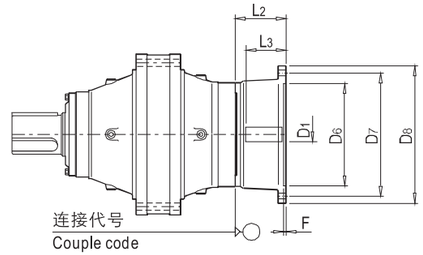

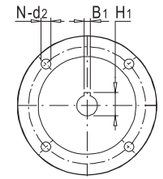

连接尺寸 Unit size	连接代号 Couple code	电机规格 Motor frame	D_1	H_1	B_1	F	L_2	L_3	D_6	D_7	D_8	N	d_2	重量 Weight kg
200	Ⓘ	71B5	14H7	16.3	5	4	87	32	110E8	130	160	4	10	6
		80B5	19E8	21.8	6	4	93.5	42	130E8	165	200	4	12	8
		90B5	24E8	27.3	8	4	93.5	52	130E8	165	200	4	12	8
		100B5	28E8	31.3	8	5	97.5	62	180E8	215	250	4	15	8.5
		112B5	28E8	31.3	8	5	97.5	62	180E8	215	250	4	15	8.5
		132B5	38E8	41.3	10	5	122	82	230E8	265	300	4	15	13
		160B5	42E8	45.3	12	6	152	114	250E8	300	350	4	19	15
		180B5	48E8	51.8	14	6	152	114	250E8	300	350	4	19	15
240	Ⓗ	132B5	38E8	41.3	10	5	132	82	230E8	265	300	4	15	15
		160B5	42E8	45.3	12	6	160	114	250E8	300	350	4	19	17
		180B5	48E8	51.8	14	6	160	114	250E8	300	350	4	19	17
		200B5	55E8	59.3	16	6	162	114	300E8	350	400	4	19	22
280	Ⓖ	160B5	42E8	45.3	12	6	176.5	114	250E8	300	350	4	19	23
		180B5	48E8	51.8	14	6	176.5	114	250E8	300	350	4	19	23
		200B5	55E8	59.3	16	6	176.5	114	300E8	350	400	4	19	29
		225B5	60E8	64.4	18	6	210.5	144	350E8	400	450	8	19	35
		250B5	65E8	69.4	18	6	230.5	144	450E8	500	550	8	19	35
353	Ⓕ	200B5	55E8	59.3	16	6	248.5	114	300E8	350	400	4	19	35
		225B5	60E8	64.4	18	6	282.5	144	350E8	400	450	8	19	41
		250B5	65E8	69.4	18	6	244	144	450E8	500	550	8	19	41
		280B5	75E8	79.9	20	6	244	144	450E8	500	550	8	19	48
400	Ⓔ	225B5	60E8	64.4	18	6	204.5	144	350E8	400	450	8	19	50
		250B5	65E8	69.4	18	6	214.5	144	450E8	500	550	8	19	50
		280B5	75E8	79.9	20	6	214.5	144	450E8	500	550	8	19	57

单输入轴 Single Input Shat

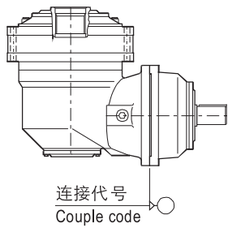

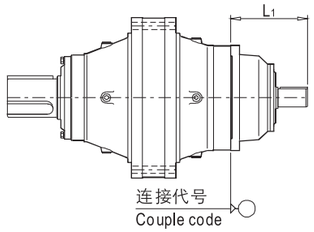

连接尺寸 Unit size	连接代号 Couple code	定货代号 Order code	L1	e1	b1	h1	D1	O	d	重量 Weight kg
200	Ⓘ	IS	151	58	8/12	35/43	32k6/40j6	-	M10	6
240	Ⓗ	HS	273	82/105	14/18	51.5/69	48k6/55k6	-	M20	15
280	Ⓖ	GS	341	105/130	18/22	64/85	60k6/80k6	-	M20	23
353	Ⓕ	FS	359	105/130	18/25	69/95	65k6/90k6	-	M20	35
400	Ⓔ	ES	346	105/130	18/25	69/95	65k6/90k6	-	M20	50
428	Ⓓ	DS	371.5	105/130	18/25	69/95	65k6/90k6	-	M20	50
445	Ⓒ	CS	370.5	130/165	22/28	85/116	80k6/110m6	65	M12	85
510	Ⓑ	BS	445	130/170	25/32	95/137	90k6/130m6	70	M16	108
542	Ⓐ	AS	446.5	130/170	28/36	116/148	110k6/140m6	70	M16	160
695	Ⓙ	JS	526.5	170/210	32/40	137/169	130k6/160m6	90	M16	200

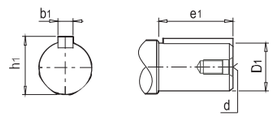

双输入轴 Double Input Shat

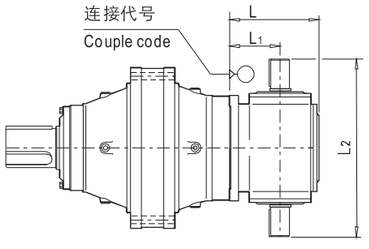

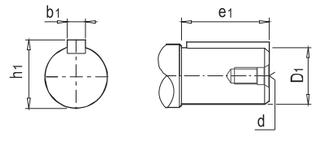

连接尺寸 Unit size	连接代号 Couple code	定货代号 Order code	设计寿命 Life time h(hour)	输入转矩 Input torque T1(N.m)	最高转速 Max. speed n(r/min)	传动比 ratio	L	L1	L2	e1	b1	h1	D1	d	重量 Weight kg
280	Ⓖ	GD	100000	550	1500	1:1	301	173.5	504	82	18	64	60k6	M20	65
353	Ⓕ	FD	100000	1200	1000	1:1.06	436	293	614	105	20	79.5	75k6	M20	90
400	Ⓔ	ED	100000	1200	1000	1:1.06	494.5	351.5	614	105	20	79.5	75k6	M20	90
428	Ⓓ	DD	100000	1200	1000	1:1.06	513	370	614	105	20	79.5	75k6	M20	90
445	Ⓒ	CD	100000	1200	1000	1:1.06	498.5	355.5	614	105	20	79.5	75k6	M20	90

CHBNS 传承之道 稳行致远
THE WAY OF INHERITANCE IS STEADY AND FAR-REACHING
传动装置专业制造商
PROFESSIONAL MANUFACTURER OF TRANSMISSION DEVICE
N series 系列

单输入轴许用径向力 Available Radial Force for Single Input Shaft

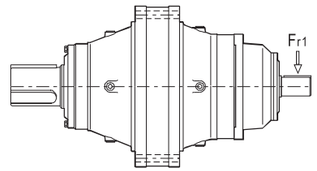

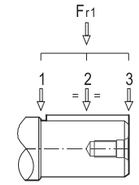

连接尺寸 Unit size	连接代号 Couple code	最高转速 Max. speed nmax(r/min)	作用点1径向力计算公式 radial Force formula for point 1 Fr11(kN)	作用点2径向力计算公式 radial Force formula for point 2 Fr12(kN)	作用点3径向力计算公式 radial Force formula for point 3 Fr13(kN)
200	Ⓘ	2500	$0.519x(n_1xh)^{1/3}$	$0.361x(n_1xh)^{1/3}$	$0.277x(n_1xh)^{1/3}$
240	Ⓗ	2000	$2.492x(n_1xh)^{0.3}$	$1.751x(n_1xh)^{0.3}$	$1.349x(n_1xh)^{0.3}$
280	Ⓖ	2000	$7.013x(n_1xh)^{0.3}$	$3.731x(n_1xh)^{0.3}$	$2.357x(n_1xh)^{0.3}$
353	Ⓕ	2000	$10.72x(n_1xh)^{0.3}$	$7.865x(n_1xh)^{0.3}$	$4.689x(n_1xh)^{0.3}$
400	Ⓔ	1500	$7.995x(n_1xh)^{0.3}$	$5.108x(n_1xh)^{0.3}$	$3.753x(n_1xh)^{0.3}$
428	Ⓓ	1500	$7.995x(n_1xh)^{0.3}$	$5.108x(n_1xh)^{0.3}$	$3.753x(n_1xh)^{0.3}$
445	Ⓒ	1500	$6.390x(n_1xh)^{0.3}$	$4.221x(n_1xh)^{0.3}$	$3.151x(n_1xh)^{0.3}$
510	Ⓑ	1000	$16.15x(n_1xh)^{0.3}$	$11.93x(n_1xh)^{0.3}$	$9.461x(n_1xh)^{0.3}$
542	Ⓐ	750	$11.36x(n_1xh)^{0.3}$	$8.392x(n_1xh)^{0.3}$	$6.654x(n_1xh)^{0.3}$
695	Ⓙ	500	$14.33x(n_1xh)^{0.3}$	$10.59x(n_1xh)^{0.3}$	$8.396x(n_1xh)^{0.3}$

注意：A：如需要轴向力，请联系本公司；
B：n_1---输入转速,$n_1 \leqslant n_a$ 单位:转/分钟;
C：h ---设计寿命 单位:小时.

Note: A：request axial load from SGR;
B：n_1---input speed,$n_1 \leqslant n_a$ unit:r/min;
C：h ---life time unit:hour

输出轴许用径向力　　Available Radial Force for Output Shaft

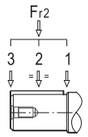

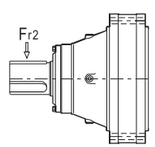

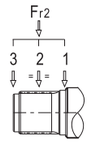

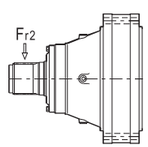

机型号 Gear Unit size	输出轴类型 Output shaft type	作用点1径向力计算公式 radial Force formula for point 1 F_{r21}(kN)	作用点2径向力计算公式 radial Force formula for point 2 F_{r22}(kN)	作用点3径向力计算公式 radial Force formula for point 3 F_{r23}(kN)
200 201	C	$3.211X(n_2xh)^{0.3}$	$1.846X(n_2xh)^{0.3}$	$1.295X(n_2xh)^{0.3}$
	S	$3.379X(n_2xh)^{0.3}$	$2.213X(n_2xh)^{0.3}$	$1.646X(n_2xh)^{0.3}$
240 241	C	$5.192X(n_2xh)^{0.3}$	$3.071X(n_2xh)^{0.3}$	$2.180X(n_2xh)^{0.3}$
	S	$5.192X(n_2xh)^{0.3}$	$5.192X(n_2xh)^{0.3}$	$2.740X(n_2xh)^{0.3}$
280 281	C	$7.088X(n_2xh)^{0.3}$	$4.960X(n_2xh)^{0.3}$	$3.815X(n_2xh)^{0.3}$
	S	$7.088X(n_2xh)^{0.3}$	$5.465X(n_2xh)^{0.3}$	$4.446X(n_2xh)^{0.3}$
353	C	$4.953X(n_2xh)^{0.3}$	$3.070X(n_2xh)^{0.3}$	$2.225X(n_2xh)^{0.3}$
	S	$4.953X(n_2xh)^{0.3}$	$3.477X(n_2xh)^{0.3}$	$2.679X(n_2xh)^{0.3}$
354 355	C	$7.171X(n_2xh)^{0.3}$	$4.508X(n_2xh)^{0.3}$	$3.287X(n_2xh)^{0.3}$
	S	$7.171X(n_2xh)^{0.3}$	$5.089X(n_2xh)^{0.3}$	$3.944X(n_2xh)^{0.3}$
400	C	$12.49X(n_2xh)^{0.3}$	$7.691X(n_2xh)^{0.3}$	$5.557X(n_2xh)^{0.3}$
	S	$12.49X(n_2xh)^{0.3}$	$8.820X(n_2xh)^{0.3}$	$6.818X(n_2xh)^{0.3}$
428 429	C	$10.28X(n_2xh)^{0.3}$	$6.912X(n_2xh)^{0.3}$	$5.207X(n_2xh)^{0.3}$
	S	$10.28X(n_2xh)^{0.3}$	$7.428X(n_2xh)^{0.3}$	$5.816X(n_2xh)^{0.3}$
445 446	C	$12.92X(n_2xh)^{0.3}$	$8.492X(n_2xh)^{0.3}$	$6.324X(n_2xh)^{0.3}$
	S	$12.92X(n_2xh)^{0.3}$	$9.237X(n_2xh)^{0.3}$	$7.188X(n_2xh)^{0.3}$
510	C	$13.50X(n_2xh)^{0.3}$	$10.07X(n_2xh)^{0.3}$	$8.027X(n_2xh)^{0.3}$
	S	$13.50X(n_2xh)^{0.3}$	$11.13X(n_2xh)^{0.3}$	$9.467X(n_2xh)^{0.3}$
542 543	C	$18.83X(n_2xh)^{0.3}$	$12.45X(n_2xh)^{0.3}$	$9.416X(n_2xh)^{0.3}$
	S	$18.83X(n_2xh)^{0.3}$	$13.27X(n_2xh)^{0.3}$	$10.38X(n_2xh)^{0.3}$
695 696	C	$32.44X(n_2xh)^{0.3}$	$24.47X(n_2xh)^{0.3}$	$19.65X(n_2xh)^{0.3}$
	S	$32.44X(n_2xh)^{0.3}$	$25.94X(n_2xh)^{0.3}$	$21.62X(n_2xh)^{0.3}$
810	C	$36.61X(n_2xh)^{0.3}$	$25.47X(n_2xh)^{0.3}$	$19.53X(n_2xh)^{0.3}$
	S	$36.61X(n_2xh)^{0.3}$	$27.46X(n_2xh)^{0.3}$	$21.97X(n_2xh)^{0.3}$
885	C	$37.75X(n_2xh)^{0.3}$	$26.58X(n_2xh)^{0.3}$	$21.57X(n_2xh)^{0.3}$
	S	$37.55X(n_2xh)^{0.3}$	$28.57X(n_2xh)^{0.3}$	$23.05X(n_2xh)^{0.3}$

注意：A：如需要轴向力，请联系本公司;
B：n_2---输出转速,$n_1 \leqslant n_a$　单位:转/分钟;
C：h ---设计寿命　单位:小时.

Note: A：request axial load from SGR;
B：n_1---output speed,$n_1 \leqslant n_a$　unit:r/min;
C：h ---life time　unit:hour

CHBNS 传承之道 稳行致远
THE WAY OF INHERITANCE IS STEADY AND FAR-REACHING
传动装置专业制造商
PROFESSIONAL MANUFACTURER OF TRANSMISSION DEVICE
N series 系列

TA

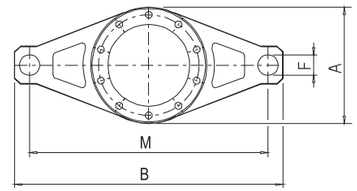

TB

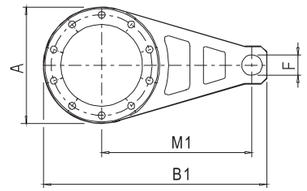

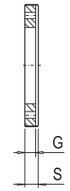

机型号 size	A	B	F Ø	G	M	S	M1	B1
200,201	185	290	21	13	250	15	250	363
240,241	220	350	25	18	300	20	300	435
280	280	430	31	18	360	20	360	535
353	325	500	37	23	420	25	420	623
354,355	353	640	37	28	560	30	560	777
400,401	410	895	43	33	800	35	800	1053
428,429	428	895	43	33	800	35	800	1053
445,446	445	1000	49	33	900	35	900	1173
510,511	510	1215	57	38	1100	40	1100	1413
542,543	542	1215	57	38	1100	40	1100	1429
695,696	700	1632	66	47	1500	50	1500	1916
810,811	810	1900	85	47	1700	50	1700	2205
885,886	885	1900	85	47	1700	50	1700	2243

底脚安装　　Foot Mounted

底脚位置　　Foot Position

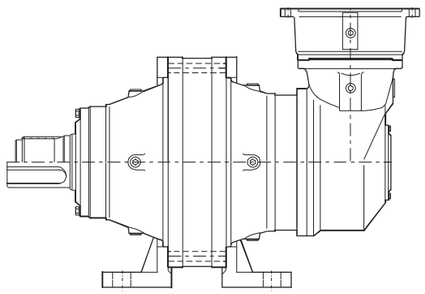

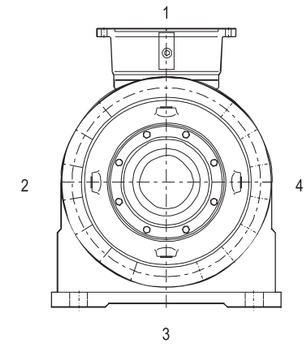

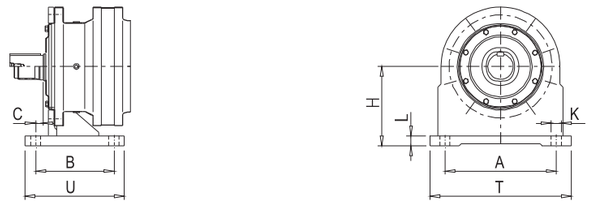

机型号 size	A	B	BA	C	K	L	T	U	H
200,201	190	115.5	–	24	16	14	240	155	132
240,241	254	142	–	19	18	18	310	184	160
280,281	280	183	–	20	22	23	340	237	200
353	318	236	–	17	26	26	390	300	225

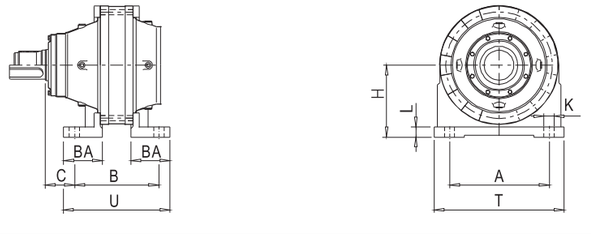

机型号 size	A	B	BA	C	K	L	T	U	H
354,355	356	313	122	54	26	24	445	379	225
400,401	406	316	136	90	26	26	500	416	250
428	457	365	140	111	33	32	550	416	280
429	457	382	140	111	33	32	550	460	280
445,446	457	369	157	112.5	33	32	550	448	280
510	480	410	174	127	39	33	590	522	315
542,543	508	440	174	169	39	33	620	562	315
695,696	700	480	227	27	45	45	850	594	415

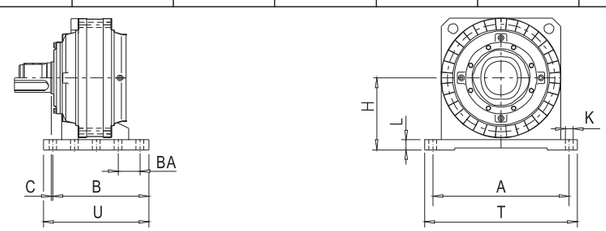

机型号 size	A	B	BA	C	K	L	T	U	H
810,811	950	155X4=620	155	10	39	45	1050	720	495
885,886	1040	155X4=620	155	10	39	45	1130	720	520

CHBNS 传承之道 稳行致远
THE WAY OF INHERITANCE IS STEADY AND FAR-REACHING
传动装置专业制造商
PROFESSIONAL MANUFACTURER OF TRANSMISSION DEVICE
N series 系列

机型号 size	同轴/inline		转角/right angle	
	级数 stages	重量/weight [kg]	级数 stages	重量/weight [kg]
200 201	1E	18	CE	32
	2E	22	C2E	36
	3E	26		
240 241	1E	36	CE	56
	2E	43	C2E	57
	3E	47	C3E	61
	4E	51		
280 281	1E	65	CE	89
	2E	74	C2E	85
	3E	78	C3E	79
	4E	82		
353 354	1E	95	CE...A	147
	2E	107	CE...B	125
	3E	114	C2E...A	135
	4E	118	C2E...B	132
			C3E	128
355	1E	97	CE	165
	2E	109	C2E	147
	3E	116	C3E	148
	4E	120		
400	1E	135	CE	260
	2E	165	C2E	189
	3E	174	C3E	194
	4E	178		
401	2E	195	C2E	300
	3E	204	C3E	340
	4E	208	C4E	350
428	2E	205	C2E	320
	3E	217	C3E	250
	4E	204		
429	1E	180	CE	310
	2E	225	C2E	275
	3E	237	C3E	262
	4E	244	C4E	259

机型号 size	同轴/inline		转角/right angle	
	级数 stages	重量/weight [kg]	级数 stages	重量/weight [kg]
445 446	1E	230	CE	360
	2E	290	C2E	340
	3E	302	C3E	322
	4E	309	C4E	324
	5E	316		
510	1E	330	CE	690
	2E	365	C2E	515
	3E	410	C3E	525
	4E	422	C4E	510
	5E	430		
542 543	1E	370	CE	730
	2E	405	C2E	555
	3E	450	C3E...A	600
	4E	462	C3E...B	520
	5E		C4E	510
695	1E	800		
	2E	930	C2E	990
	3E	990	C3E	1060
	4E	1002	C4E	1130
	5E	1014		
696	2E	1030	C2E	1170
	3E	1090	C3E	1230
	4E	1120	C4E	1250
	5E	1140		
810	1E	1210		
	2E	1520	C2E	1900
	3E	1590	C3E	1690
	4E	1640	C4E...A	1740
	5E	1660	C4E...B	1750
885	1E	1900		
	2E	2700		
	3E	2800	C3E...A	3160
	4E	2840	C3E...B	2900
	5E	2860	C4E	3000

机型号 size	同轴/inline			
	级数 stages	油量/oil quantity［L］		
		B5	V1	V3
200 201	1E	0.8	1.2	1.1
	2E	1.1	1.5	1.4
	3E	1.4	1.8	1.7
240 241	1E	1.4	2.4	2.2
	2E	1.9	2.9	2.7
	3E	2.2	3.2	3.0
	4E	2.5	3.5	3.3
280 281	1E	2.5	3.5	3.2
	2E	3.3	4.3	4.0
	3E	3.6	4.6	4.3
	4E	3.9	4.9	4.6
353 354	1E	3.5	5.0	4.5
	2E	4.5	6.0	5.5
	3E	5.0	6.5	6.0
	4E	5.3	6.8	6.3
355	1E	4.0	5.5	5.0
	2E	5.0	6.5	6.0
	3E	5.5	7.0	6.5
	4E	5.8	7.3	6.8
400	1E	5.0	6.5	6.0
	2E	6.3	7.8	7.3
	3E	7.1	8.6	8.1
	4E	7.4	8.9	8.4
401	2E	6.8	8.3	7.8
	3E	7.6	9.1	8.6
	4E	7.9	9.4	8.9
428	2E	9.0	14.0	12.0
	3E	10.0	15.0	13.0
	4E	11.0	16.0	14.0
429	1E	8.0	13.0	11.0
	2E	10.0	15.0	13.0
	3E	11.0	16.0	14.0
	4E	12.0	17.0	15.0

机型号 size	同轴/inline			
	级数 stages	油量/oil quantity［L］		
		B5	V1	V3
445 446	1E	9.0	14.0	12.0
	2E	12.0	17.0	15.0
	3E	13.0	18.0	16.0
	4E	13.0	18.0	16.0
	5E	14.0	19.0	17.0
510	1E	14.0	22.0	18.0
	2E	15.0	23.0	19.0
	3E	17.0	25.0	21.0
	4E	18.0	26.0	22.0
	5E	19.0	27.0	23.0
542 543	1E	18.0	26.0	22.0
	2E	19.0	27.0	23.0
	3E	21.0	29.0	25.0
	4E	22.0	30.0	26.0
	5E	23.0	31.0	27.0
695	1E	25.0	40.0	35.0
	2E	26.0	41.0	36.0
	3E	29.0	44.0	39.0
	4E	30.0	45.0	40.0
	5E	31.0	46.0	41.0
696	2E	30.0	45.0	40.0
	3E	33.0	48.0	43.0
	4E	34.0	49.0	44.0
	5E	35.0	50.0	45.0
810	1E	36.0	72.0	67.0
	2E	37.0	74.0	69.0
	3E	40.0	80.0	75.0
	4E	43.0	86.0	81.0
	5E	46.0	92.0	87.0
885	1E	45.0	90.0	80.0
	2E	48.0	96.0	86.0
	3E	50.0	100.0	90.0
	4E	53.0	106.0	96.0
	5E	56.0	112.0	102.0

CHBNS 传承之道 稳行致远
THE WAY OF INHERITANCE IS STEADY AND FAR-REACHING
传动装置专业制造商
PROFESSIONAL MANUFACTURER OF TRANSMISSION DEVICE
N series 系列

机型号 size	直角轴/right angle				
	级数 stages	油量/oil quantity［L］			
		B5/B52/B53	B51	V1	V3
200 201	CE	1.1	1.6	2.1	1.9
	C2E	1.4	1.9	2.4	2.2
240 241	CE	1.7	2.3	2.9	2.7
	C2E	2.2	2.8	3.4	3.2
	C3E	2.5	3.1	3.7	3.5
280 281	CE	3.0	4.0	5.0	4.8
	C2E	3.8	4.8	5.8	5.6
	C3E	4.1	5.1	6.1	5.9
353 354	CE...A	4.5	6.5	8.5	7.5
	CE...B	4.0	6.0	8.0	7.0
	C2E...A	5.0	7.0	9.0	8.0
	C2E...B	4.5	6.5	8.5	7.5
	C3E	5.5	7.5	9.5	8.5
355	CE	6.5	6.5	8.5	7.5
	C2E	5.5	7.5	9.5	8.5
	C3E	6.0	8.0	10.0	9.0
400	CE	12.0	13.0	15.0	14.0
	C2E	9.0	11.0	13.0	12.0
	C3E	10.0	12.0	14.0	13.0
401	C2E	12.0	14.0	16.0	15.0
	C3E	13.0	15.0	17.0	16.0
	C4E	14.0	16.0	18.0	17.0
428	C2E	11.0	16.0	21.0	19.0
	C3E	12.0	17.0	22.0	20.0
429	CE	10.0	15.0	20.0	18.0
	C2E	12.0	17.0	22.0	20.0
	C3E	13.0	18.0	23.0	21.0
	C4E	14.0	19.0	24.0	22.0

机型号 size	直角轴/right angle				
	级数 stages	油量/oil quantity［L］			
		B5/B52/B53	B51	V1	V3
445 446	CE	8.0	13.0	18.0	16.0
	C2E	11.0	16.0	21.0	19.0
	C3E	14.0	19.0	24.0	22.0
	C4E	15.0	20.0	25.0	23.0
510	CE	16.0	24.0	32.0	28.0
	C2E	16.0	24.0	32.0	28.0
	C3E	20.0	28.0	36.0	32.0
	C4E	24.0	32.0	40.0	36.0
542 543	CE	20.0	28.0	36.0	32.0
	C2E	20.0	28.0	36.0	32.0
	C3E...A	24.0	32.0	40.0	36.0
	C3E...B	20.0	28.0	36.0	32.0
	C4E	22.0	30.0	38.0	34.0
695	C2E	34.0	38.0	52.0	48.0
	C3E	38.0	42.0	56.0	52.0
	C4E	42.0	46.0	60.0	56.0
696	C2E	38.0	42.0	56.0	52.0
	C3E	42.0	46.0	60.0	56.0
	C4E	46.0	50.0	64.0	60.0
810	C2E	42.0	78.0	84.0	79.0
	C3E	45.0	84.0	90.0	85.0
	C4E...A	48.0	90.0	96.0	91.0
	C4E...B	51.0	96.0	102.0	97.0
885	C3E...A	50.0	95.0	100.0	90.0
	C3E...B	48.0	87.0	93.0	88.0
	C4E	55.0	105.0	110.0	100.0